Pulsed Fission Fusion (PuFF) Propulsion System

Project PI: Robert B. Adams, Ph.D.

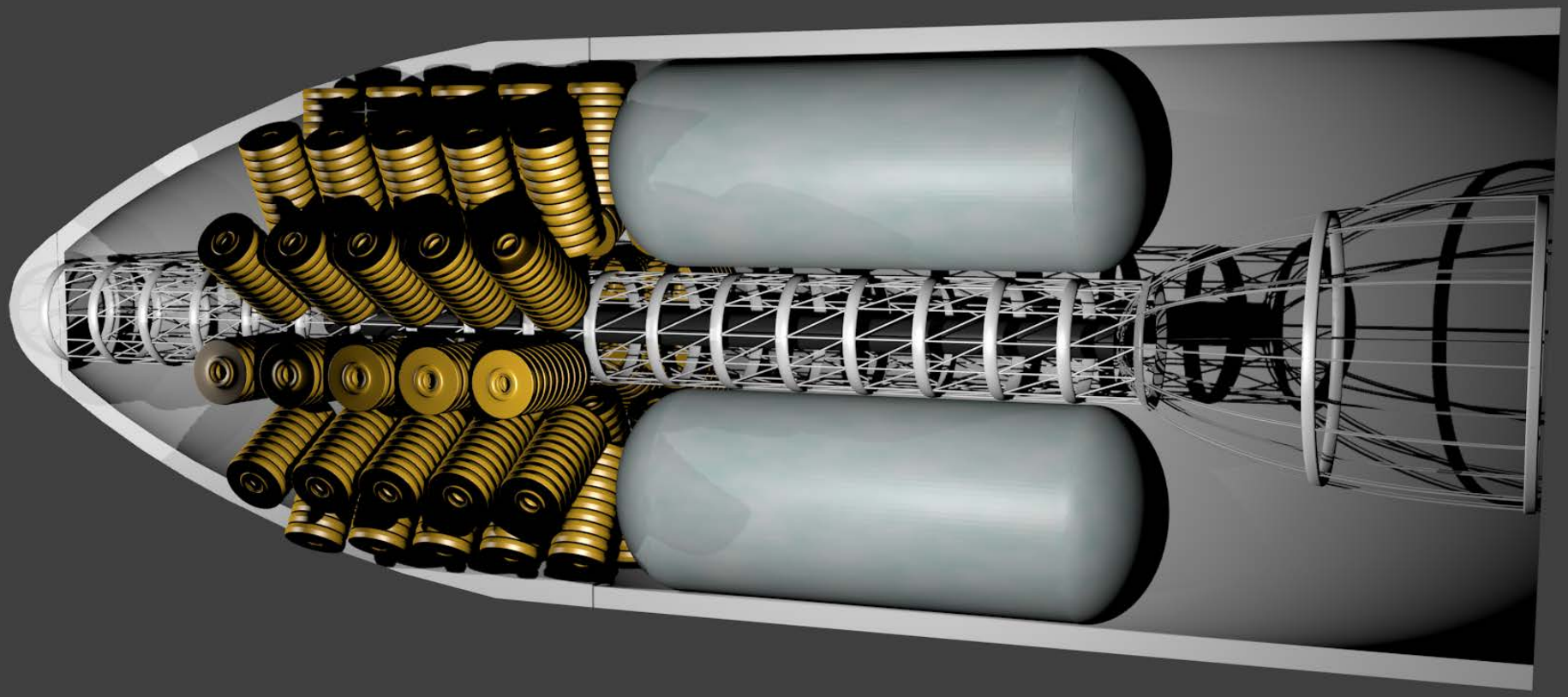

Team

Project PI: Robert B. Adams, Ph.D.

- Jason Cassibry, Ph.D. – Associate Professor, UAH
- Glen Doughty, NASA-MSFC/ER24
- Brian Taylor, NASA-MSFC/ER23
- Anson Koch, NASA-MSFC/ER23
- Patrick Giddens – Staff Engineer, UAH
- Bill Seidler, Ph.D. – Research Professor, UAH
- Rachel Wagner – Graduate Student, UAH
- Kevin Schillo – Graduate Student, UAH
- Nathan Schilling – Graduate Student, UAH
- Steve Howe, Ph.D. – Howe Industries

Pulsed Fission Fusion (PuFF) Propulsion Concept

Project PI: Robert B. Adams, Ph.D.

PuFF enables robotic missions to the outer solar system and near interstellar space, and greatly enhances crewed missions in the inner solar system

- The PuFF engine system provides a propulsive impulse operating on the principle of a pulsed two stage nuclear reaction combining Fission and Fusion processes triggered by the compression of a nuclear fuel target (containing small quantities of uranium/tritium)using an intense electrical pulse
- Resultant charged particles, emitted by the impulse, are deflected by magnetic nozzle, also serving as a energy capture device to energize the primary power system capacitors for subsequent pulse
- Concept focused on a single reusable vehicle design enabling a wide range of mission architectures. For example, Mars mission performance sufficient to carry Space Habitat, CEV, Lander, Surface Habitat & ISRU facility (120 mT payload).

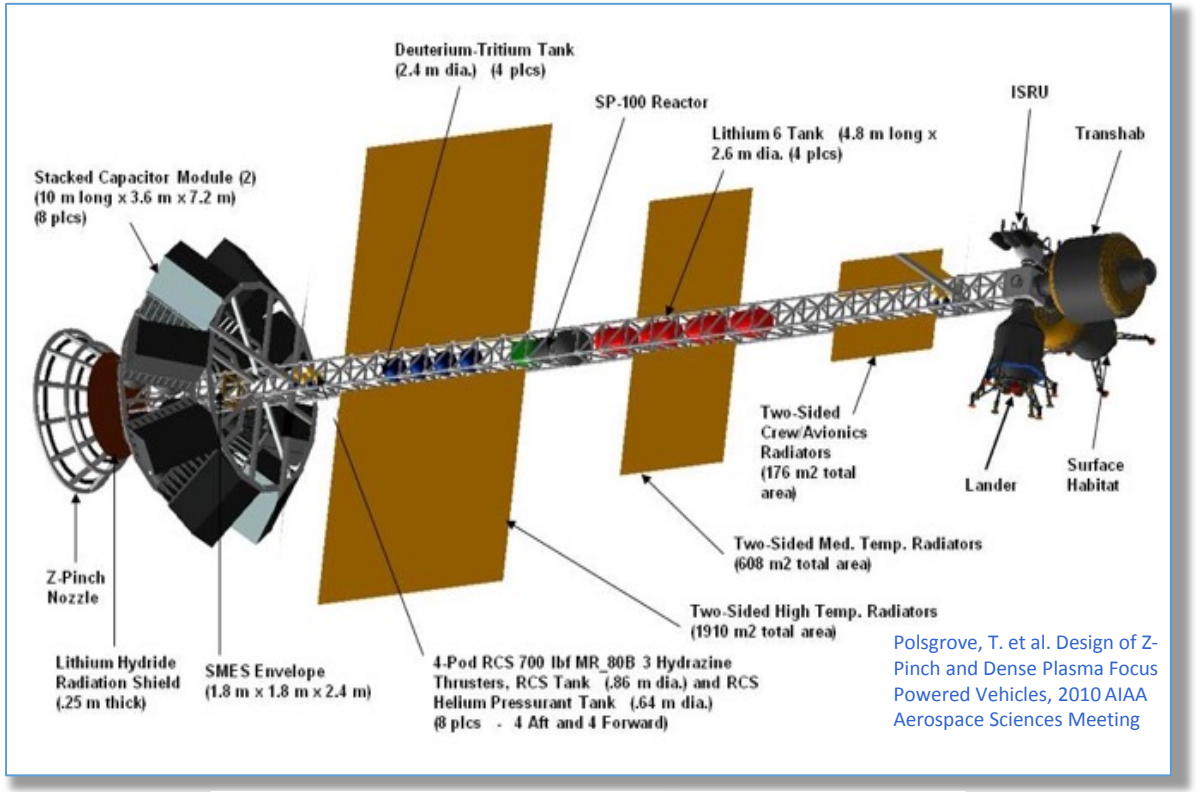

Polsgrove, T. et al. Design of Z-Pinch and Dense Plasma Focus Powered Vehicles, 2010 AIAA Aerospace Sciences Meeting

	PUFF
Isp	30,000 sec
Thrust	29,000 N
In-Space System Weight (Mars Mission)	240 Metric Tons

PuFF enables missions throughout the solar system and beyond with a single, in-space, reusable engine design.

- Mass Defect = Mass of free nucleons – mass of assembled nucleus
  - Nuclear force (residual strong force) stronger than electrostatic
- Nuclear Binding Energy
  - $\frac{E}{A} = \frac{\Delta m}{A} c^2$
- Fusion
  - Energy release by combining nuclei
- Fission
  - Energy release by splitting nuclei

$$\mathcal{E} = mc^2$$

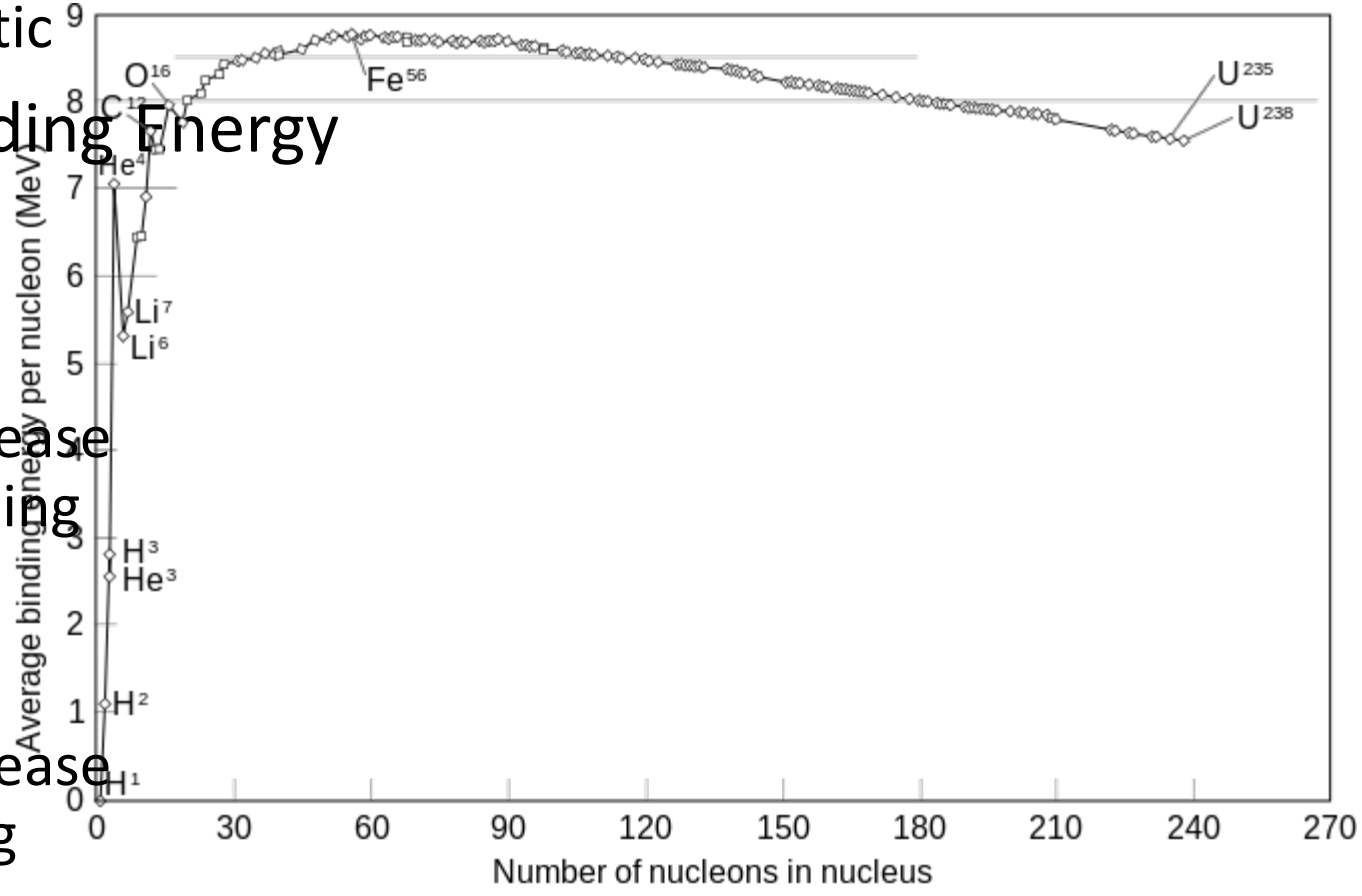

http://en.wikipedia.org/wiki/Nuclear_binding_energy

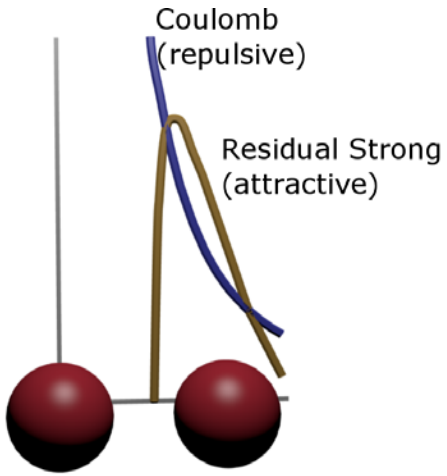

Fission/Fusion Reaction Space

Project PI: Robert B. Adams, Ph.D.

- Fission

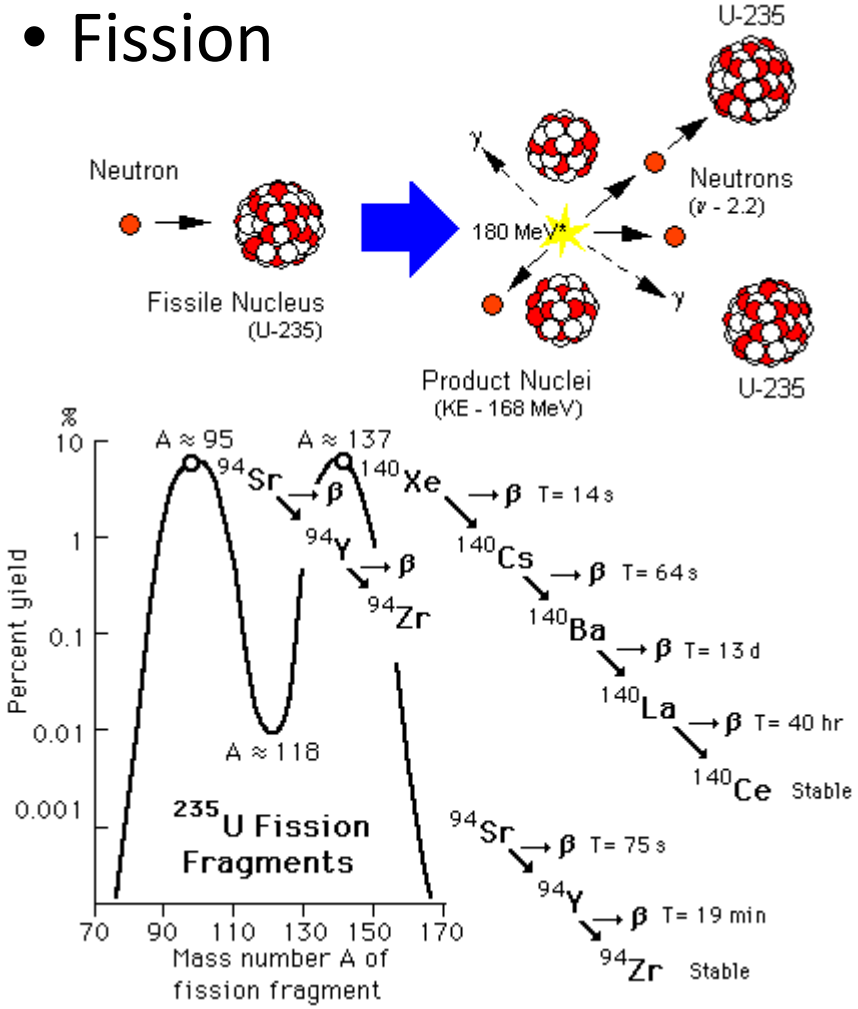

http://www.propagation.gatech.edu/ECE6390/project/Fall2010/Projects/group10/MANTIS_2010_SatCom/MANTIS_2010_SatCom/PowerSys/default.html

http://www.mwit.ac.th/~physicslab/hbase/nucene/fisfrag.html#c1

- Fusion

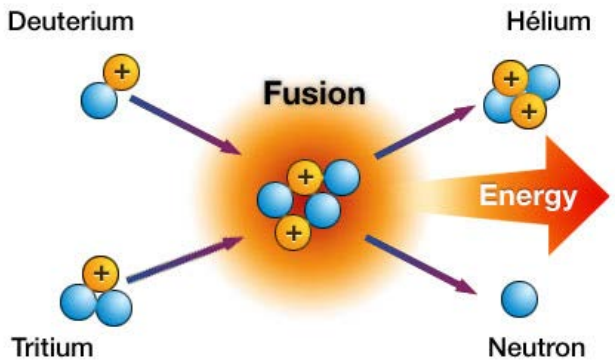

(1)	$^{2}_{1}D$	+ $^{3}_{1}T$	→ $^{4}_{2}He$	(3.5 MeV)	+ n^{0}	(14.1 MeV)				
(2i)	$^{2}_{1}D$	+ $^{2}_{1}D$	→ $^{3}_{1}T$	(1.01 MeV)	+ p^{+}	(3.02 MeV)				50%
(2ii)			→ $^{3}_{2}He$	(0.82 MeV)	+ n^{0}	(2.45 MeV)				50%
(3)	$^{2}_{1}D$	+ $^{3}_{2}He$	→ $^{4}_{2}He$	(3.6 MeV)	+ p^{+}	(14.7 MeV)				
(4)	$^{3}_{1}T$	+ $^{3}_{1}T$	→ $^{4}_{2}He$		+ 2 n^{0}			+ 11.3 MeV		
(5)	$^{3}_{2}He$	+ $^{3}_{2}He$	→ $^{4}_{2}He$		+ 2 p^{+}			+ 12.9 MeV		
(6i)	$^{3}_{2}He$	+ $^{3}_{1}T$	→ $^{4}_{2}He$		+ p^{+}	+ n^{0}		+ 12.1 MeV		57%
(6ii)			→ $^{4}_{2}He$	(4.8 MeV)	+ $^{2}_{1}D$	(9.5 MeV)				43%
(7i)	$^{2}_{1}D$	+ $^{6}_{3}Li$	→ 2 $^{4}_{2}He$	+ 22.4 MeV						
(7ii)			→ $^{3}_{2}He$	+ $^{4}_{2}He$	+ n^{0}			+ 2.56 MeV		
(7iii)			→ $^{7}_{3}Li$	+ p^{+}				+ 5.0 MeV		
(7iv)			→ $^{7}_{4}Be$	+ n^{0}				+ 3.4 MeV		
(8)	p^{+}	+ $^{6}_{3}Li$	→ $^{4}_{2}He$	(1.7 MeV)	+ $^{3}_{2}He$	(2.3 MeV)				
(9)	$^{3}_{2}He$	+ $^{6}_{3}Li$	→ 2 $^{4}_{2}He$	+ p^{+}				+ 16.9 MeV		
(10)	p^{+}	+ $^{11}_{5}B$	→ 3 $^{4}_{2}He$					+ 8.7 MeV		

http://fusionforenergy.europa.eu/understandingfusion/

http://en.wikipedia.org/wiki/Nuclear_fusion

Fission/Fusion Ignition Requirements

Project PI: Robert B. Adams, Ph.D.

- Fission
  - Criticality is a function of
    - fission cross section
    - Number density
    - And geometry
  - Neutrons must balance
    - Lost outside reactor
    - Absorbed through photon

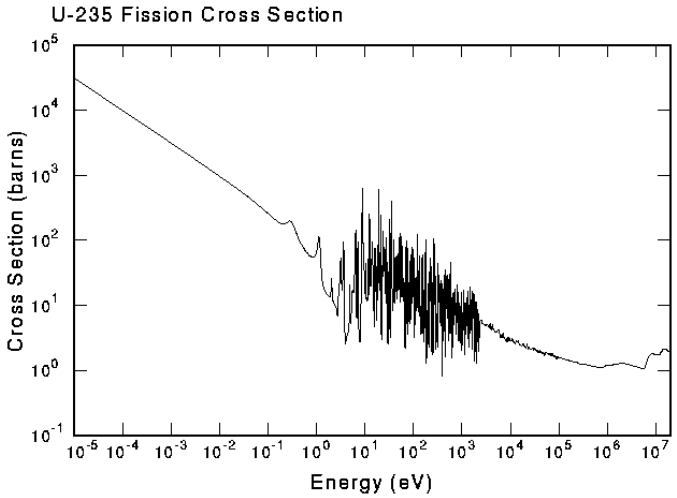

http://t2.lanl.gov/nis/tour/sch002.html

- Fusion
  - Breakeven is a function of
    - Fusion cross section
    - temperature distribution
    - density
  - Lawson Criterion

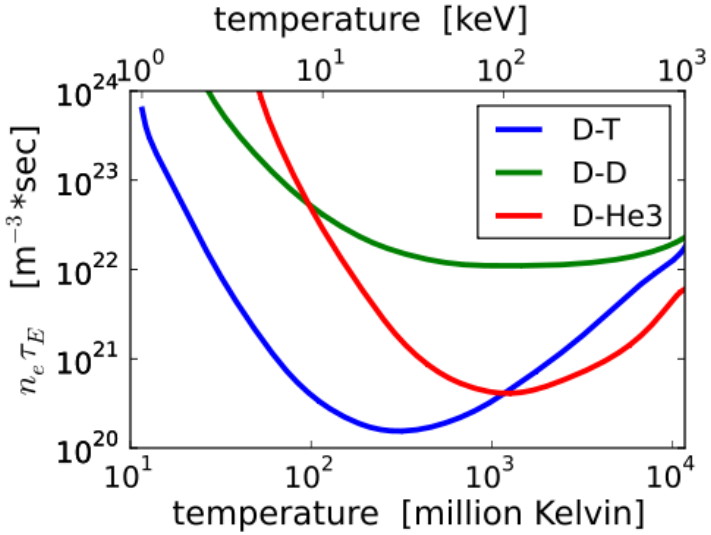

http://en.wikipedia.org/wiki/Lawson_criterion

Pulsed Fission Fusion (PuFF) Propulsion Operation

Project PI: Robert B. Adams, Ph.D.

PuFF utilizes a multistage nuclear process

- ***Pre-reaction***
  - Lithium shell/cone is injected to bridge the power system anode to target holder.
  - 2 mega-amps (at 2 mega-volts) travels along the liquid lithium cone to target.
  - Lorentz force (jxB) produced by the current/magnetic field compresses a hybrid target of uranium/Deuterium-Tritium (D-T), reaching criticality for the Uranium.
- ***First Stage (Fission)***
  - Uranium criticality produces spontaneous fission reaction (heating)
  - Fission heats the D-T fuel creating fusion conditions (interaction cross-section)
- ***Second Stage (Fission - Fusion Cascade)***
  - Fusion produces additional neutron which in turn ignite more fission
  - Additional fission reactions generate more heat, boosting fusion rate
  - Fission to D-T fusion cycle cascades until burnout.
- ***Expansion***
  - Plasma produced during impulse expands outward against magnetic nozzle
  - Magnetic nozzle directs particles generating thrust & captures energy necessary to initiate the next pulse
  - Single target impulse event requires several microseconds; repeat up to 100 Hz

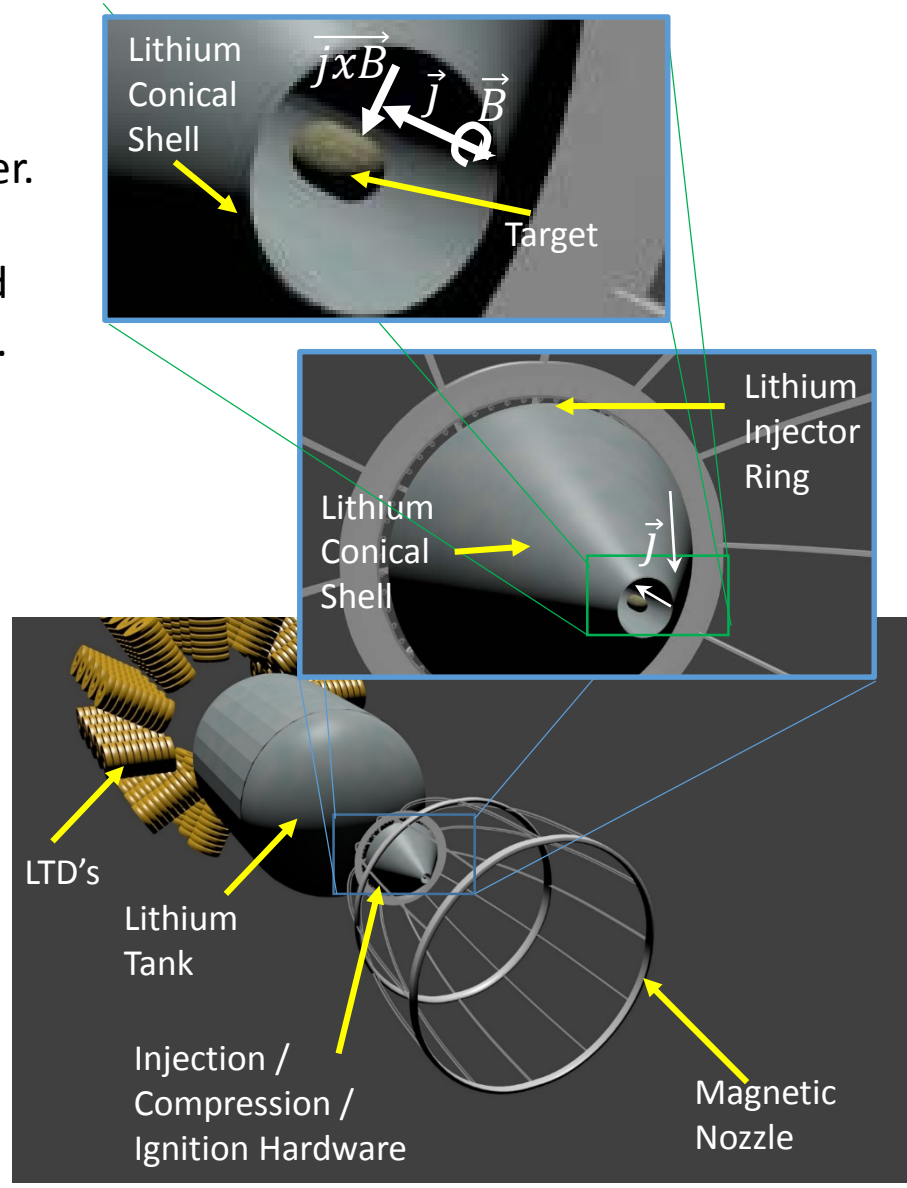

Mars High Speed Mission

Project PI: Robert B. Adams, Ph.D.

- Earth to Mars in 37 days
  - 0.6 Earth escape
  - 2.6 day TMI
  - 31.4 day coast
  - 0.8 day Mars deceleration
  - 2.1 day Mars capture
- Payload
  - 25 mT crew compartment

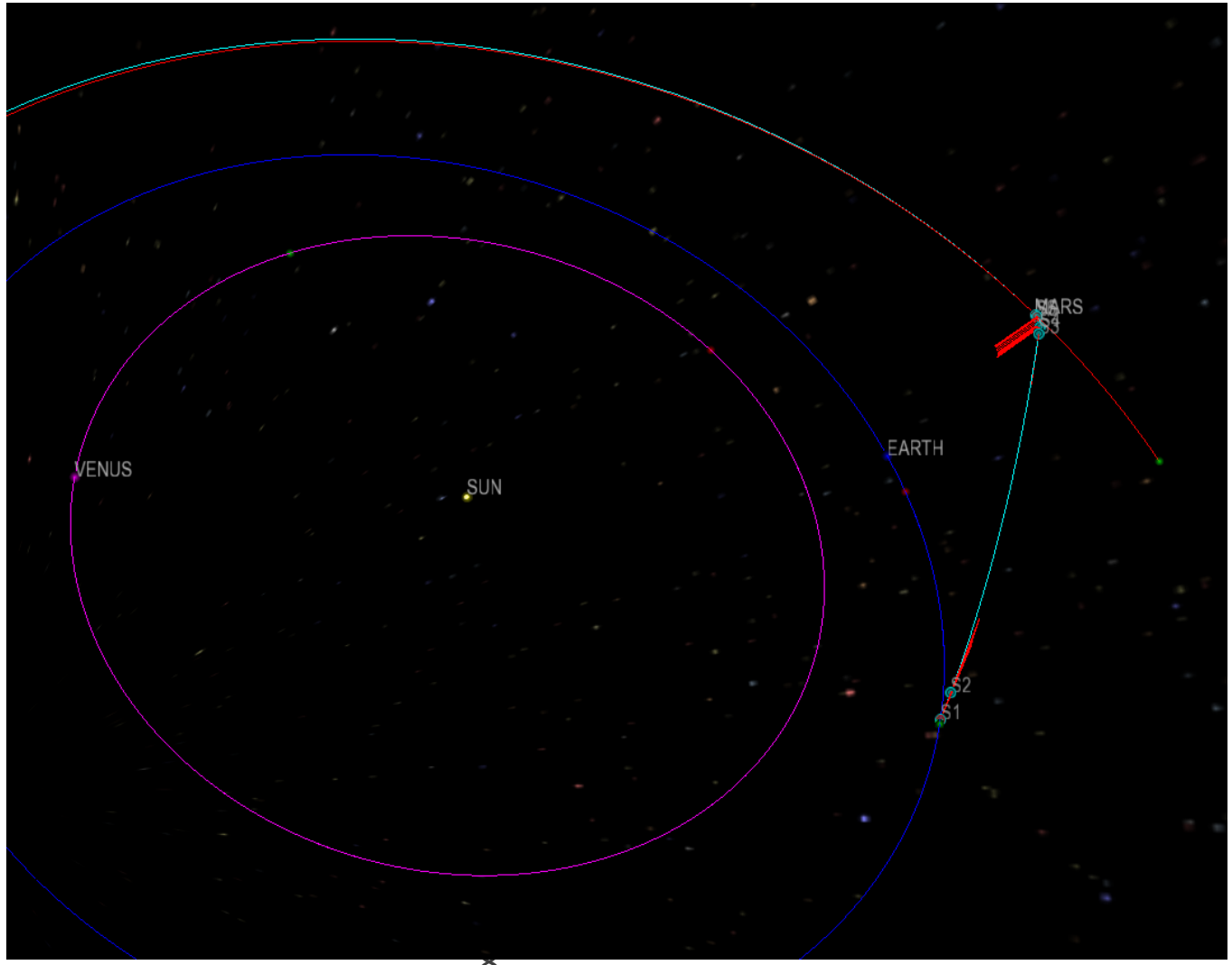

Interstellar Precursor Mission Analysis

Project PI: Robert B. Adams, Ph.D.

- Interstellar Space
  - Termination shock in 5 years (pass Voyager I)
  - 275 AU in 10 years
  - Solar gravitational lens in 20 years
  - 1000 AU in 36 years
- Burn profile
  - 0.4 days Earth escape
  - 1.4 days deorbit
  - 48 day inbound coast
  - 2.5 day solar burnout

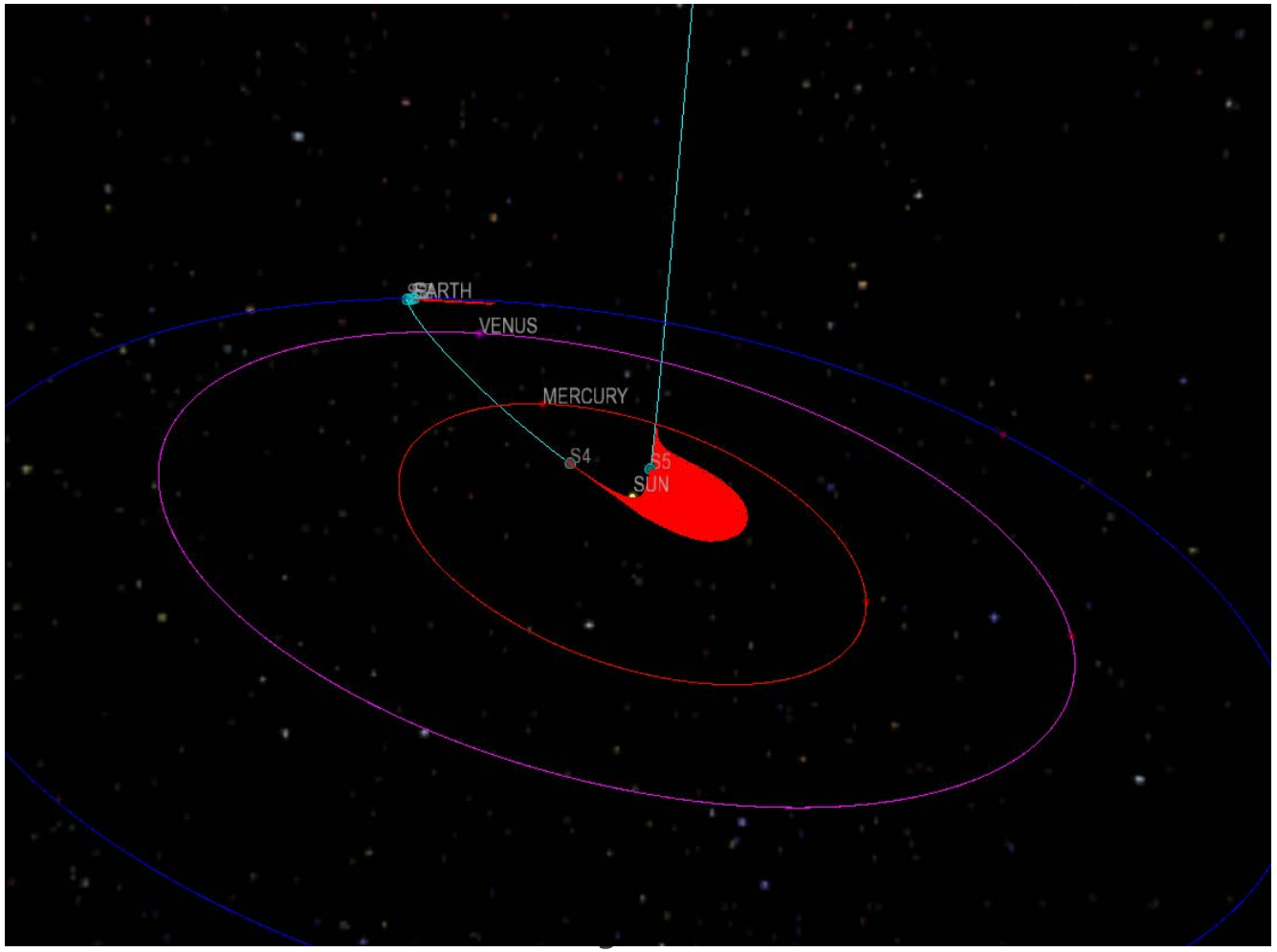

Research and Development Support for Charger – 1, PuFF, LTD

Project PI: Robert B. Adams, Ph.D.

Historical timeline for basic R&D activities related to PUFF

- Charger-1, PuFF and LTD development provides a unique high power research and development capability for MSFC
- Limited funding from varied sources and partners – focused on small hardware evaluations
- Striving to maintain forward momentum

April 2012
UAH receives DM2 from DTRA

June 2012
CSDWG awards 130K to effort

December 2012
UAH receives 300k from AL Innov. Fund

September 2012
MSFC Chief Technologist awards 0.58 FTE, 57k

July 2013
NIAC Phase 1 granted for PuFF concept

February 2013
Initial mating of Charger-1 components

May 2014
First implosion of Li wire

April 2015
First firing of LTD cavity

October 2014
CIF awarded – LTD Development

July 2015
Boeing, UAH, MSFC CSDWG commits 300k, 0.8 FTE to Charger-1

Jan 2016
CSDWG commits 0.6 FTE

October 2015
CIF continuation– LTD Development

March 2016
ZP Advanced Propulsion FTEs

October 2016
CIF– Nuclear target/Mat'l mgmt.

April 2018
NIAC Phase 2 NSTRG Award Adv. Prop FTE

October 2017
TE – LTD and MITL Development

Integrated Development Program – TRL 1-4

Project PI: Robert B. Adams, Ph.D.

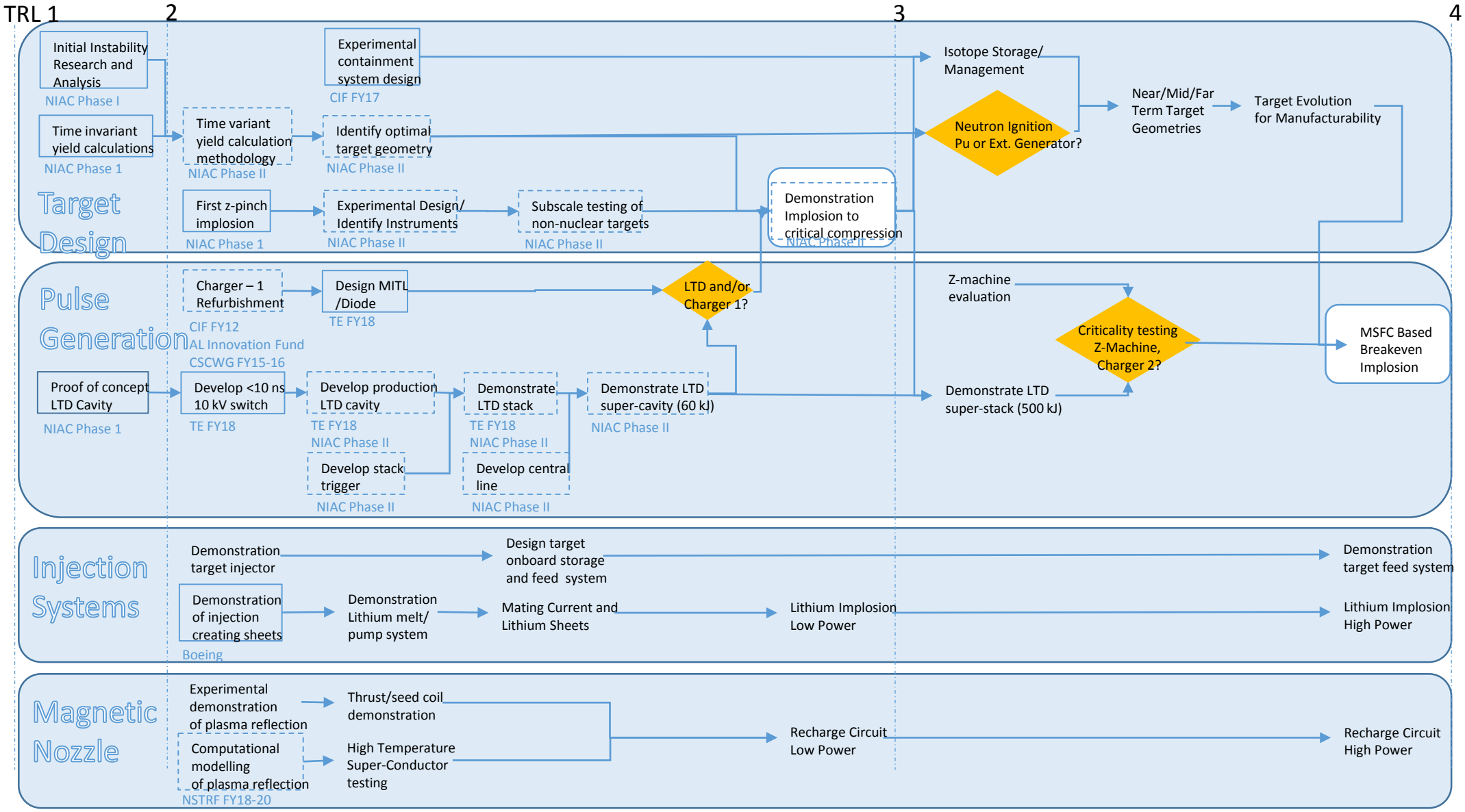

Target Design and Modelling

Project PI: Robert B. Adams, Ph.D.

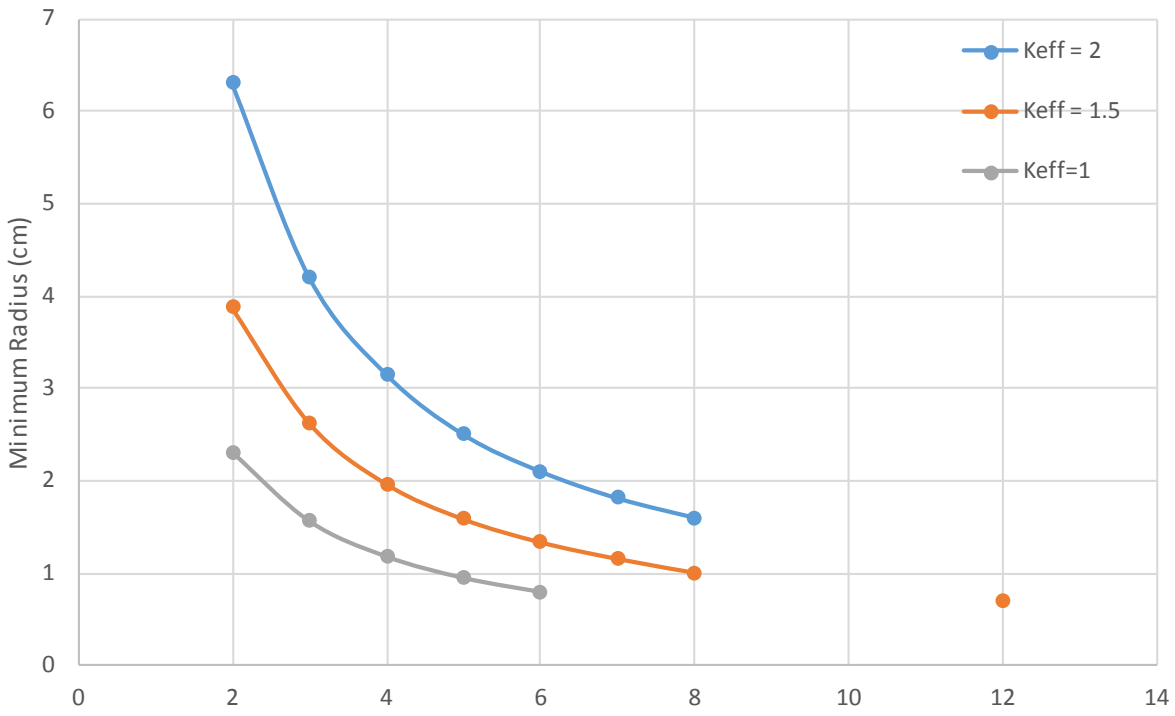

- Time invariant model
  - MCNP criticality runs
  - EOS to determine pressure, current reqt's

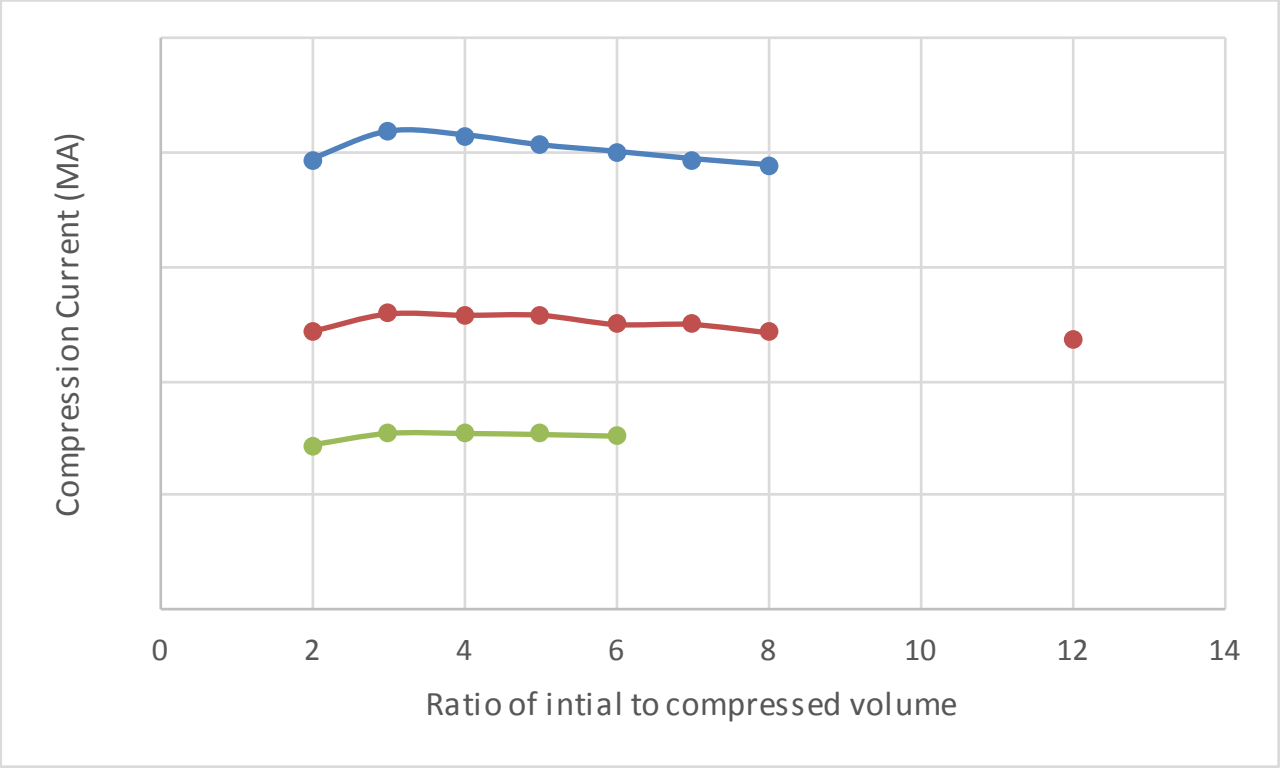

Charger 1 Refurbishment – MITL Development

Project PI: Robert B. Adams, Ph.D.

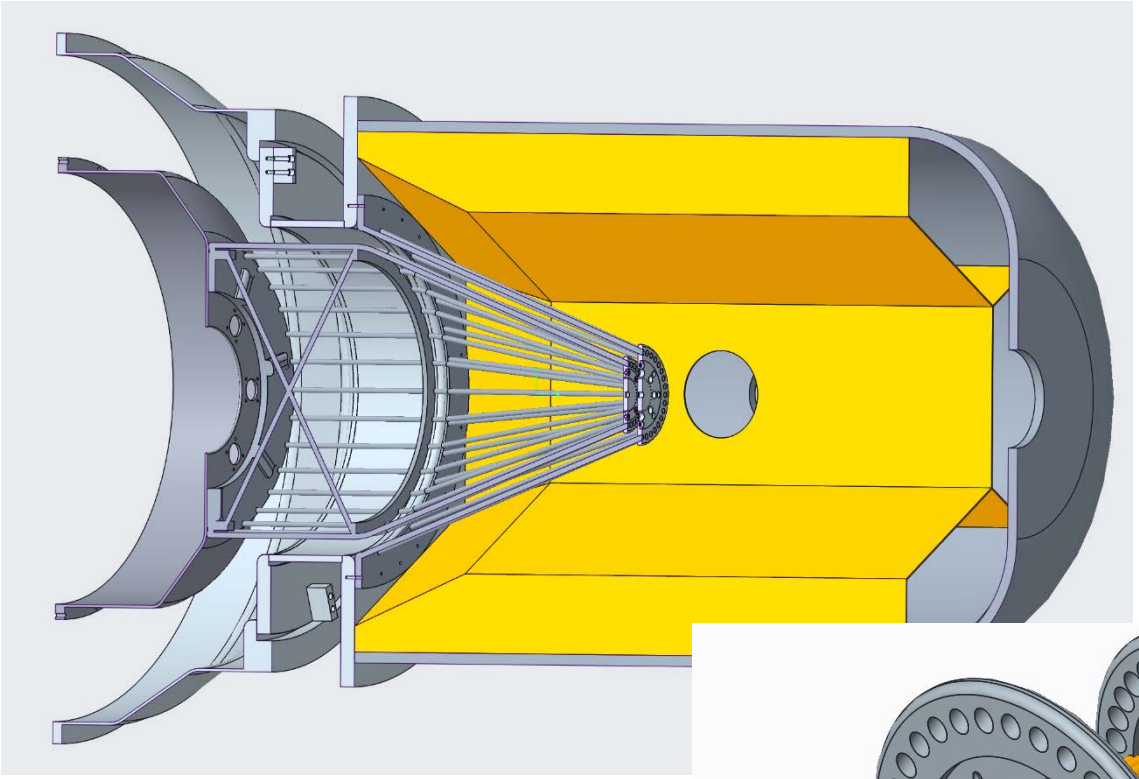

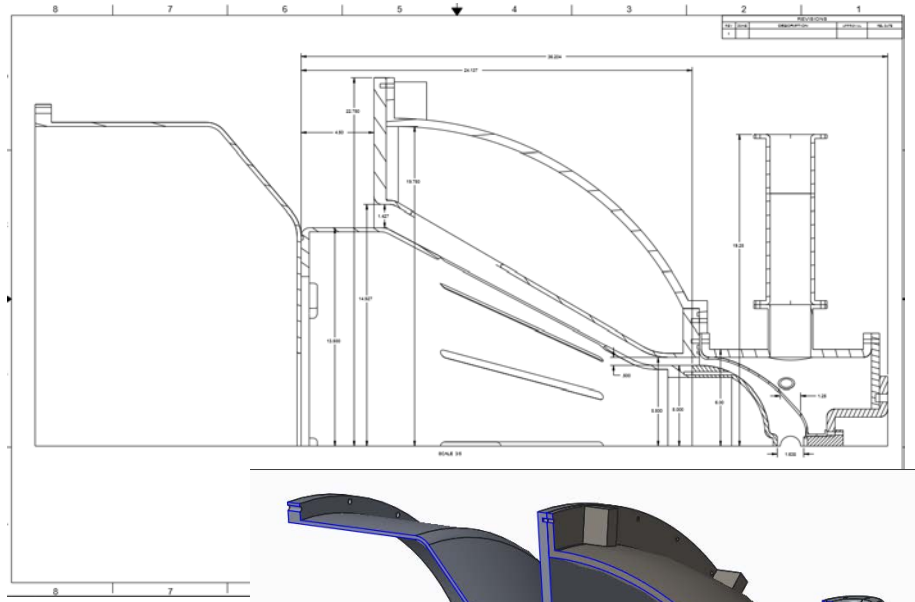

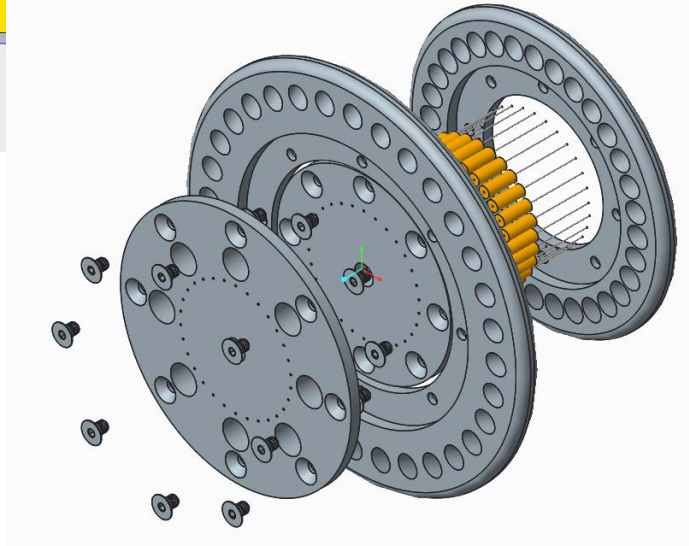

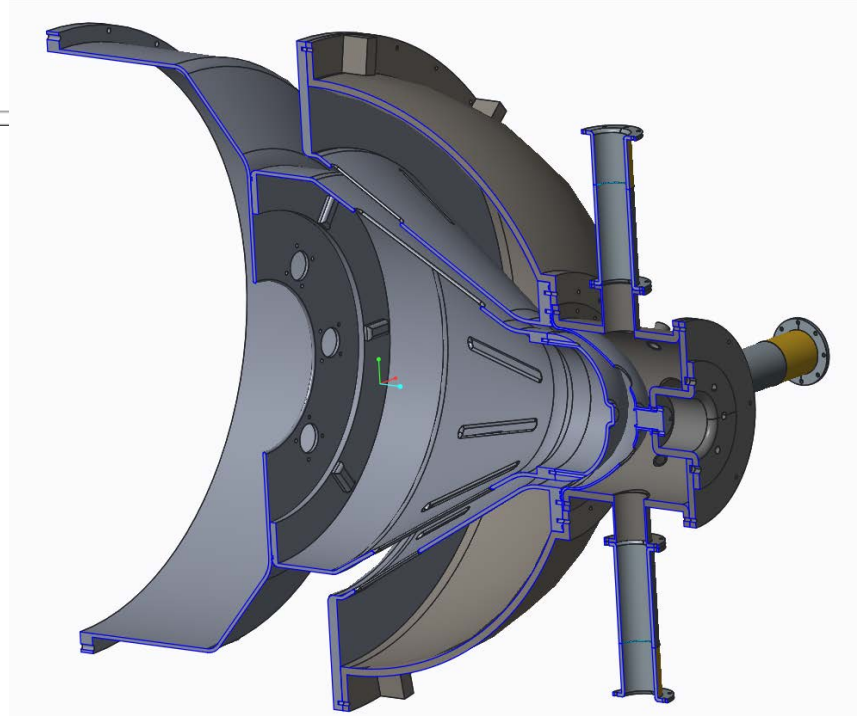

Charger 1 Refurbishment – Mini-Marx Testing

Project PI: Robert B. Adams, Ph.D.

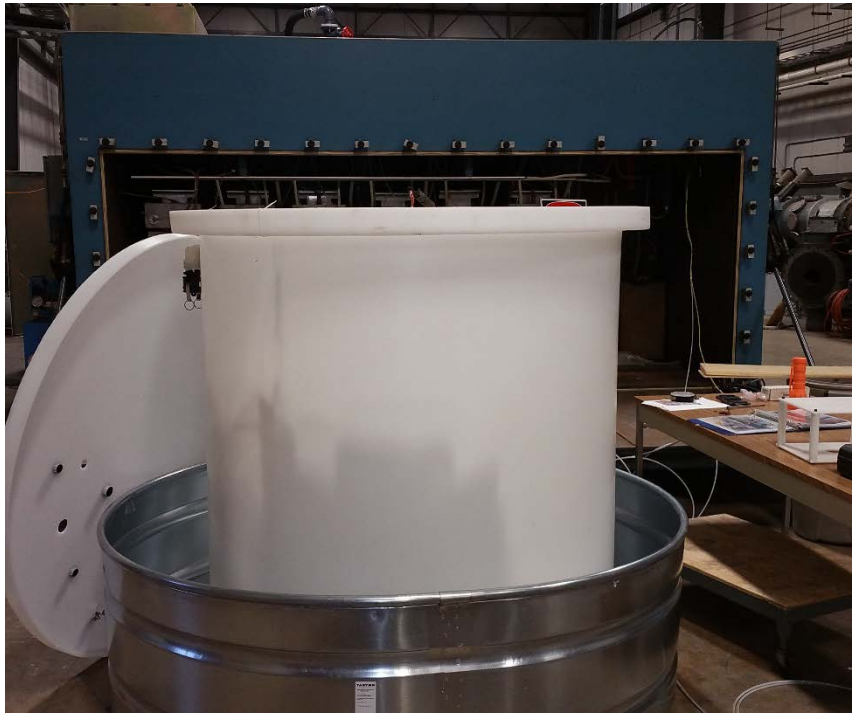

Linear Transformer Driver – Cavity and Stack Development

Project PI: Robert B. Adams, Ph.D.