Conf-911079--2

ASSESSMENT OF TWO BWR ACCIDENT MANAGEMENT STRATEGIES*

S. A. Hodge, M. Petek

Oak Ridge National Laboratory
Oak Ridge, Tennessee 37831

CONF-911079--2

DE92 002318

ABSTRACT

Candidate mitigative strategies for management of in-vessel events during the late phase (after core degradation has occurred) of postulated BWR severe accidents were considered at Oak Ridge National Laboratory (ORNL) during 1990. The identification of new strategies was subject to the constraint that they should, to the maximum extent possible, make use of the existing equipment and water resources of the BWR facilities and not require major equipment modifications or additions. As a result of this effort, two of these candidate strategies were recommended for additional assessment. The first is a strategy for containment flooding to maintain the core and structural debris within the reactor vessel in the event that vessel injection cannot be restored to terminate a severe accident sequence. The second strategy pertains to the opposite case, for which vessel injection would be restored after control blade melting had begun; its purpose is to provide an injection source of borated water at the concentration necessary to preclude criticality upon recovering a damaged BWR core.

Assessments of these two strategies have been performed during 1991 under the auspices of the Detailed Assessment of BWR In-Vessel Strategies Program. This paper provides a discussion of the motivation for and purpose of these strategies and the potential for their success.

1. INTRODUCTION

Boiling Water Reactors (BWRs) have unique features that would cause their behavior under severe accident conditions to differ significantly from that expected for the pressurized water reactor design[1-5]. Consequently, it has been necessary to analyze BWR accident sequences separately, and the NRC has sponsored programs at ORNL for this purpose since 1980[6]. The objective of these BWR severe accident programs has been to perform analyses of a spectrum of accident sequences beyond the design basis for typical specific U.S. BWR reactor designs. The accident sequences selected for analysis have been in general those identified as dominant in leading to core melt for BWRs by the methods of probabilistic risk assessment (PRA) as carried out by other programs. The specific plants modeled and the accident sequences considered were selected by the process of nomination by the ORNL program manager and approval by the NRC technical monitors.

*Research sponsored by the Office of Nuclear Regulatory Research, U.S. Nuclear Regulatory Commission under Interagency Agreement No. 1886-8045-2B with the U.S. Department of Energy under contract DE-AC05-84OR21400 with Martin Marietta Energy Systems, Inc.

The detailed analyses of the dominant severe accident sequences identified by PRA have been performed in recognition that PRA, by the basic nature of its requirements to consider every possible accident sequence, cannot enter into matters of detail. The purpose of the detailed analyses has been either to confirm the adequacy of or to challenge the simplifying assumptions necessarily applied to each accident sequence in the PRA and to provide a realistic appraisal of the sequence of events and the aftermath. Further preventive measures that might be taken to decrease the probability of each severe accident sequence studied and accident management procedures that might be implemented to reduce the consequences have been addressed. Feedback of the results of the detailed analyses has always been provided to the other facilities performing the PRA; most recently, this has involved close cooperation with the NUREG-1150 effort[7] at Sandia National Laboratories (SNL).

With the comprehensive information provided by NUREG-1150 concerning the relative probabilities of BWR severe accident sequences and with the knowledge and experience gained from the series of detailed accident analyses[8-22], the next logical step was to consider the facets of BWR severe accident management in a structured process, with the goal of identifying potential new strategies and enhancements. This was accomplished by means of an assessment of the current status of accident management procedures with respect to effective mitigation of the dominant BWR severe accident sequences. The accident sequences considered were Station Blackout and Anticipated Transient Without Scram (ATWS), which have been consistently identified by PRA to be the predominant contributors to the overall calculated core damage frequency for BWR internally-initiated accidents. There are two primary categories of Station Blackout, each leading to severe core damage if unmitigated, but at widely separated times. For the short-term case, reactor vessel injection capability is lost at the inception of the accident and core damage begins during the second hour after scram. For the long-term case, vessel injection is lost only after battery failure and core damage occur more than ten hours after scram. For ATWS as in Station Blackout, core damage would occur as a result of loss of vessel injection capability; this, however, is not expected to occur unless the ATWS involves reactor vessel isolation [closure of the main steam isolation valves (MSIVs)] and is compounded by failure of the plant boron injection system (or systems). The timing of core damage for an ATWS accident sequence that progressed this far would be determined by the effectiveness of the delaying actions taken by the plant operators.

The BWR Owners' Group Emergency Procedure Guidelines (EPGs)[23] were examined from the standpoint of their application to Station Blackout and ATWS. This was done for two reasons. The first objective was to determine the extent to which the EPGs currently implement the intent of the BWR accident management strategies that have been suggested in the report[24] *Assessment of Candidate Accident Management Strategies* (NUREG/CR-5474), published in March 1990. The second objective was to determine the extent to which the current operator actions specified by the EPGs would be effective in unmitigated severe accident situations. It was found that many of the recommended strategies are included in the current version (Revision 4) of the EPGs and that with one exception, the remaining involve plant-specific considerations to the extent that they may be more appropriate for inclusion within local plant emergency procedures than within the generic symptom-oriented EPGs. The exception is a strategy for injection of boron following core damage and control blade relocation, which clearly would be appropriate for the EPGs.

With respect to the second objective, the EPGs do not include guidelines for the late phase in-vessel events that would occur only after the onset of significant core damage. Instead, the guidance terminates with the specification of alternate methods for injecting water into the reactor vessel. The conclusions of this examination of the EPGs are documented in Reference 25: the

primary conclusions are that more can be done to provide guidance for late-phase operator actions and that the greatest potential for improvement of the existing BWR emergency procedure strategies lies in the area of severe accident management, both for determining the extent of ongoing damage to the in-vessel structures and for attempting to terminate the accident.

Based upon the results of these analyses, a second in-vessel severe accident management study[26] was undertaken to propose new strategies for mitigation of the late-phase events and to provide a discussion of the motivation for these strategies and a general description of the methods by which they might be carried out. Four candidate late accident mitigation strategies were proposed. These are:

1. Keep the Reactor Vessel Depressurized. Reactor vessel depressurization is important should an accident sequence progress to the point of vessel bottom head penetration failure because it would preclude direct containment heating (DCH) and reduce the initial threat to containment integrity. This candidate strategy would provide an alternate means of reactor vessel venting should the safety/relief valves (SRVs) become inoperable because of loss of control air or DC power. PRAs based upon the existing BWR facilities consistently include accident sequences involving loss of DC power and control air among the dominant sequences leading to core melt for BWRs.

2. Restore Injection in a Controlled Manner. Late accident mitigation implies actions to be taken after core melting, which requires at least partial uncovering of the core, which occurs because of loss of reactor vessel injection capability. BWRs have so many electric motor-driven injection systems that loss of injection capability implies loss of electrical power. (This is why Station Blackout is consistently identified by PRAs to be the dominant core melt precursor for BWRs.) If electric power were restored while core damage is in progress, then the automatic injection by the low-pressure, high-capacity pumping systems could be more than two hundred times greater than that necessary to remove the decay heat. This strategy would provide for controlled restoration of injection and would be particularly important if the control blades had melted and relocated from the core.

3. Inject Boron if Control Blade Damage Has Occurred. This strategy would provide that the water used to fill the reactor vessel after vessel injection capability was restored would contain a concentration of the boron-10 isotope sufficient to preclude criticality, even if none of the control blade neutron poison remained in the core region. This candidate strategy is closely related to Item 2, above.

4. Containment Flooding to Maintain Core and Structural Debris In-Vessel. This candidate strategy was proposed as a means to maintain the core residue within the reactor vessel in the event that vessel injection cannot be restored as necessary to terminate the severe accident sequence. Containment flooding to above the level of the core is currently incorporated within the EPGs as an alternative method of providing a water source to the vessel in the event of design-basis LOCA (the water would flow into the vessel from the drywell through the break). Here it is recognized that containment flooding might also be effective in preventing the release of molten materials from the reactor vessel for the risk-dominant non-LOCA accident sequences such as Station Blackout.

Finally, these four candidate strategies were evaluated for the purpose of selecting those that require and have sufficient potential to justify detailed quantitative assessment.[27]

DISCLAIMER

The candidate strategy to keep the reactor vessel depressurized was not recommended for further assessment because it is believed far more practical to improve the reliability of the control air and DC power supplies for the SRVs than to invent alternative methods for venting the reactor vessel under severe accident conditions. Nevertheless, consideration of the reliability of control air and DC power should be an important part of the individual plant examination (IPE) process[28,29] since loss of these systems is inherent in the risk-dominant sequences leading to core melt consistently identified for BWRs by the PRA process.

The candidate strategy for containment flooding was recommended for further assessment. This proposed strategy has the potential of serving not only as a first-line defense in preventing the release of core and structural debris from the reactor vessel, but also as a second-line defense in preventing failure of the Mark I drywell shell if debris release from the reactor vessel did occur. All current considerations of the Mark I shell melt-through issue are based upon an assumption that the depth of water over the drywell floor would be limited to about 0.6 m (2 feet), the height at which overflow to the pressure suppression pool would occur. However, drywell flooding to surround the lower portion of the reactor vessel with water would provide more than 9 m (30 ft) of water over the floor. This would preclude direct shell failure considerations and, therefore, has the potential to be an excellent late mitigation strategy.

The candidate strategies for restoration of injection in a controlled manner and injection of boron if control blade damage has occurred were recommended to be combined into a single strategy for "Controlled Injection of Boron for Reactor Vessel Refill." This would provide for the addition of boron together with the injected flow being used to recover the core, in sufficient quantity to preclude criticality as the water level rises within the reactor vessel. A recent assessment by Pacific Northwest Laboratories[30] (PNL) indicates that criticality is probable should the BWR reactor vessel be reflooded after debris bed relocation has occurred, but suggests that the direct consequences might be controlled. On the other hand, criticality after core degradation and a shifting of the nature of the accident sequence is clearly undesirable.

It is the purpose of this paper to discuss the results of the detailed analyses of the two candidate strategies recommended for further assessment. The strategy for containment flooding is discussed in Section 2, while the strategy for controlled boron injection during vessel refill is described in Section 3.

2. DRYWELL FLOODING AS A LATE ACCIDENT MITIGATION STRATEGY

As described in the Introduction, candidate mitigative strategies for management of in-vessel events during the late phase (after core degradation has occurred) of postulated BWR severe accidents have been considered at Oak Ridge National Laboratory (ORNL). This identification of new strategies was subject to the constraint that they should, to the maximum extent possible, make use of the existing equipment and water resources of the BWR facilities and not require major equipment modifications or additions. One of the recommendations developed by this Program for Detailed Assessment of BWR In-Vessel Strategies calls for additional assessment of a strategy for containment flooding to maintain the core and structural debris within

the reactor vessel in the unlikely event that vessel injection could not be restored as necessary to terminate a severe accident sequence.

Geometric effects of reactor vessel size dictate that the effectiveness of external cooling of the vessel bottom head as a means to remove decay heat from an internal debris pool would be least for the largest vessels. Considering also that the motivation for maintaining any core and structural debris within the reactor vessel is greatest for the Mark I drywells, the primary focus of this assessment was upon the largest BWR Mark I containment facilities such as Peach Bottom or Browns Ferry.

The immediate goal of the considered strategy for containment flooding would be to surround the lower portion of the reactor vessel with water, thereby protecting both the instrument guide tube penetration assemblies and the vessel bottom head itself from failure by overtemperature. The threat would be provided by the increasing temperature of the lower plenum debris bed after dryout. First, molten liquids forming within the bed would relocate downward into the instrument guide tubes challenging their continued integrity. Subsequently, heating of the vessel bottom head by conduction from the debris would threaten global failure of the wall by creep rupture.

Nevertheless, it seems beyond question that all portions of the reactor vessel pressure boundary (including the instrument guide tubes) that are contacted by water on their outer surfaces would survive any challenge imposed by a lower plenum debris bed or its relocated liquids. There is a problem, however, in that most of the upper portion of the reactor vessel could not be covered by water and, more significant in the short term, much of the outer surface of the vessel bottom head would be dry as well.

That the upper portion of the reactor vessel could not be covered is due to the location within the containment of the drywell vents. Since low-pressure pumping systems would be used for flooding, the drywell would have to be vented during filling and the water level could not rise above the elevation of the vents, at about two-thirds vessel height. That much of the outer surface of the reactor vessel bottom head would be dry is due to the gas pocket that would be trapped within the vessel support skirt during the process of raising the water level within the drywell. Figure 1 indicates the approximate size of this gas pocket for the Browns Ferry reactor vessel, with the assumption that gas leakage through the manhole access cover does not occur.

The results of this assessment demonstrate that the existence of a trapped gas pocket beneath the vessel skirt attachment would ultimately prove fatal to the integrity of the bottom head wall. Nevertheless, the most important attribute of drywell flooding, that of preventing early failure of the instrument guide tube penetration assemblies, would be realized. These results are among those listed in Table 1 where it is shown (first entry) that in the absence of water, penetration assembly failures would be expected at about 250 minutes after scram. If penetration failures did not occur, then creep rupture of the bottom head would be expected after 10 hours if the bottom head is dry and after 13 hours if the drywell is flooded. However, since penetration failures are expected to occur in the absence of water, the important contribution of drywell flooding is to shift the expected failure mode from penetration failures (Table 1 first entry) to bottom head creep rupture (Table 1 third entry).

ORNL-DWG 91M-2517D ETD

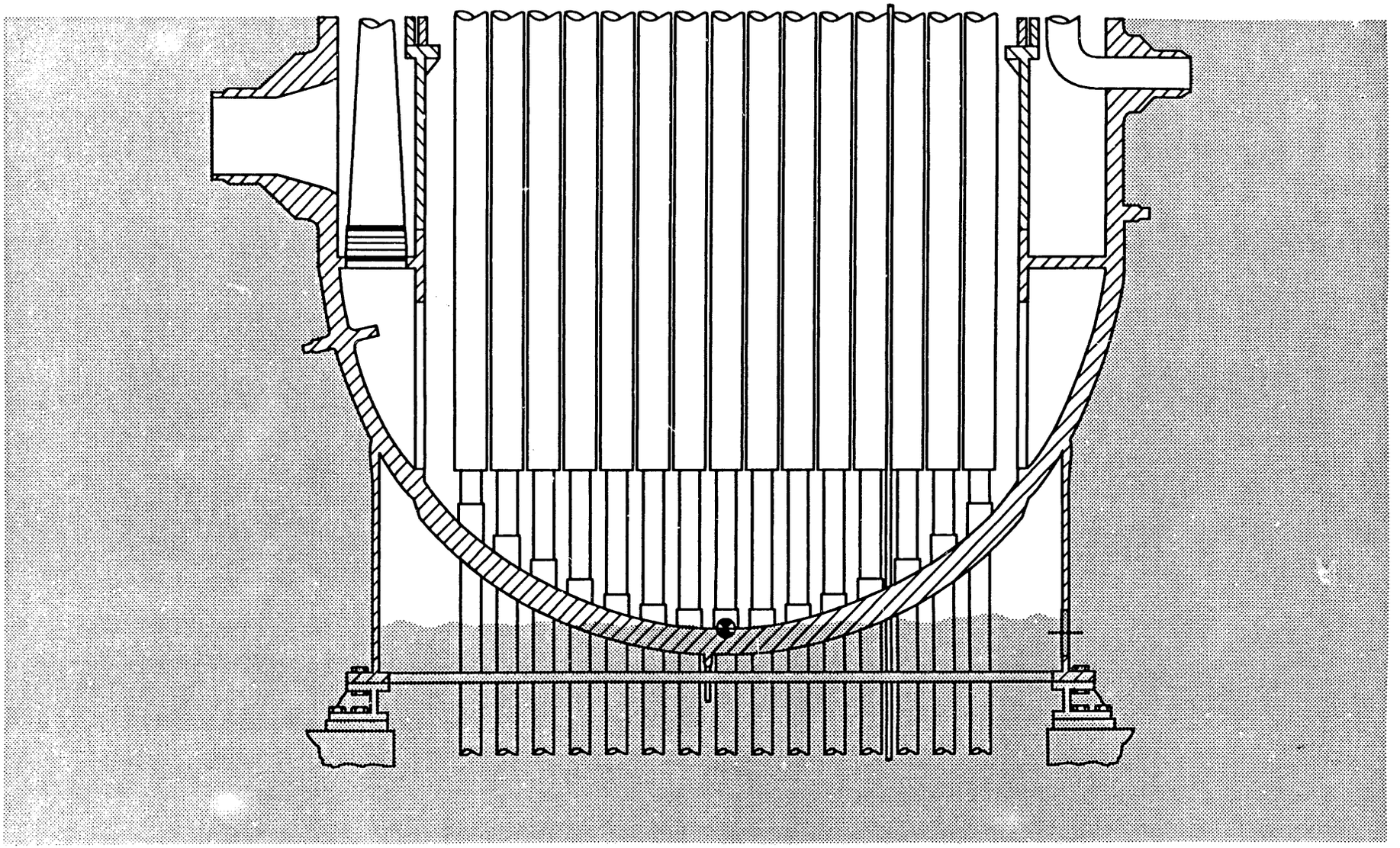

Fig. 1. The water level within the vessel skirt would be limited by the trapping of a portion of the drywell atmosphere.

Table 1. Estimated failure times for the reactor vessel bottom head pressure boundary for Peach Bottom/Browns Ferry short-term station blackout

Drywell Flooded	Failure Mechanism	Time to Failure	
		Minutes	Hours
No	Penetration Assemblies	250	4.2
No	Bottom Head Creep Rupture	600 – 640	10.0– 10.7
Yes	Bottom Head Creep Rupture	780 – 840	13.0 – 14.0

The effectiveness of drywell flooding could be improved if the reactor vessel support skirt were vented in order to reduce the trapped gas volume and increase the fraction of bottom head surface area contacted by water. Partial venting could be achieved by loosening the cover on the support skirt manhole access. This would increase the covered portion of the bottom head from 55% to 73% of the total outer surface area, which delays the predicted time of bottom head creep rupture by about one hour. (The reduced gas pocket for this case is illustrated in Figure 2.) The predicted failure times for the basic case without skirt venting and for the case of partial venting at the manhole access are indicated in the first two entries of Table 2.

Table 2. Effect of skirt venting upon time to failure of the bottom head pressure boundary for Peach Bottom/Browns Ferry short-term station blackout with drywell flooding

Skirt Vented	Failure Mechanism	Time to Failure	
		Minutes	Hours
No	Bottom Head Creep Rupture	780 – 840	13.0 – 14.0
Partial	Bottom Head Creep Rupture	840 – 900	14.0 – 15.0
Complete	Melting of Upper Vessel Wall	>1200	>20.0

Complete venting of the reactor vessel support skirt would provide 100% water coverage of the vessel bottom head but would require special measures such as the drilling of small holes at the upper end of the skirt, just below the attachment weld. This is not considered to be a practical suggestion for the existing BWR facilities, but complete venting might be attainable for the advanced BWR designs. As indicated by the last entry in Table 2, 100% water coverage of the vessel bottom head would convert the failure mechanism from bottom head creep rupture to melting of the upper vessel wall and would delay the predicted time of failure to more than 20 hours after scram.

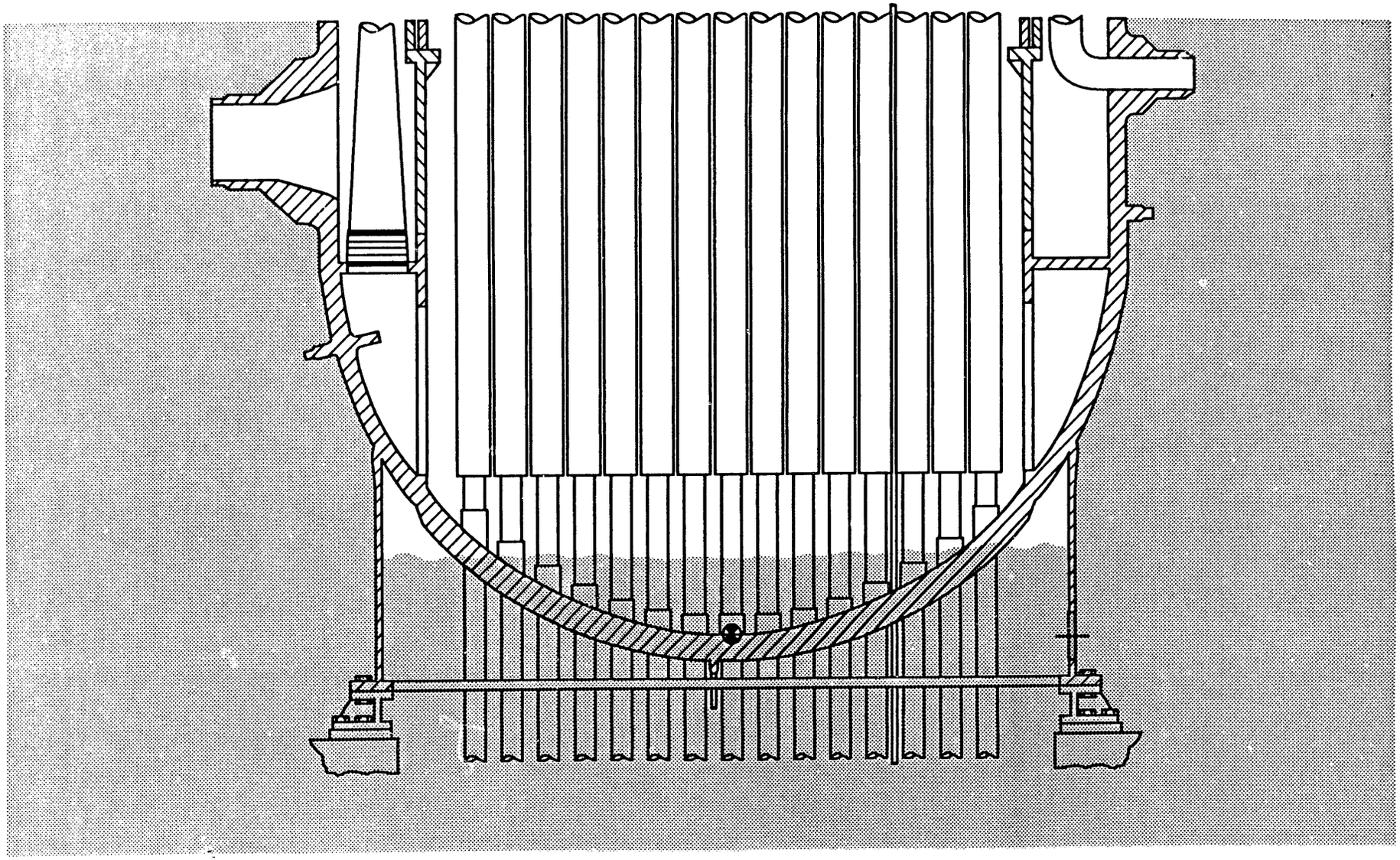

Fig. 2. The volume of gas trapped beneath the reactor vessel support skirt can be reduced by providing a vent path from the manhole access cover.

In summary, all portions of the reactor vessel wall that are covered by water would be adequately protected against failure by melting or creep rupture. For the cases with no venting or partial venting of the support skirt, the creep rupture failure is predicted to occur in the portion of the vessel wall adjacent to the trapped gas pocket beneath the skirt. Partial venting would reduce the size of the gas pocket and delay the predicted time of failure, but the failure mechanism would still be creep rupture beneath the skirt attachment weld. With complete venting, however, there would be no gas pocket and this failure mechanism would be eliminated.

What cannot be eliminated, however, is the radiative heat transfer upward within the reactor vessel from the surface of the lower plenum debris bed. About one-half to two-thirds of all energy release within the bed would be radiated upward after bottom head dryout. Initially, the primary heat sink for this radiation would be the water trapped in the downcomer region between the core shroud and the vessel wall above the debris bed. It is the heating of this water that creates the only steam source within the reactor vessel after lower plenum dryout.

After the water in the downcomer region became exhausted, the upward radiative heat transfer from the debris surface would serve to increase the temperature of the upper reactor vessel internal structures. For calculations with the existence of a gas pocket beneath the skirt, bottom head creep rupture is predicted to occur while the temperature of these internal stainless steel heat sinks remains below the melting point. If bottom head creep rupture did not occur, however, the debris would remain within the vessel, the upward radiation would continue, and the upper internal structures would melt.

The mass of the BWR internal structures (core shroud, steam separators, dryers) is large. Melting of these stainless steel structures under the impetus of the upward debris pool radiation (more than 14 hours after scram) would occur over a long period of time. Nevertheless, decay heating of the debris pool and the associated upward radiation would be relentless and, after exhaustion of the stainless steel, the only remaining internal heat sink above the pool surface would be the carbon steel of the upper vessel wall. All portions of the wall cooled by water on their outer surfaces would remain intact, but those upper portions of the vessel exposed to the drywell atmosphere would ultimately reach failure temperatures.

It should be obvious from this discussion of the effect of water upon cooling of the vessel wall that it would be desirable to have a drywell flooding strategy that would completely submerge the reactor vessel. This could not be achieved in existing facilities because of the limitation that the height of water within the drywell cannot exceed the elevation of the drywell vents. Future designs, however, might provide for complete coverage of the reactor vessel as a severe accident mitigation technique.

Table 3 provides a summary of the calculated failure times and release mechanisms for all of the cases considered in this study. These include the cases previously discussed in connection with Tables 1 and 2, plus one additional case (third entry) in which it is assumed that reactor vessel pressure control is lost at the time of drywell flooding, because of the submergence of the safety/relief valves. [The location of these valves (SRVs) within the Browns Ferry drywell is shown in Figures 3 and 4.] The increased wall tensile stress associated with this case would cause the wall creep rupture to occur at a lower temperature, advancing the time of failure by about two hours over the depressurized case (compare the third and fourth entries in Table 3).

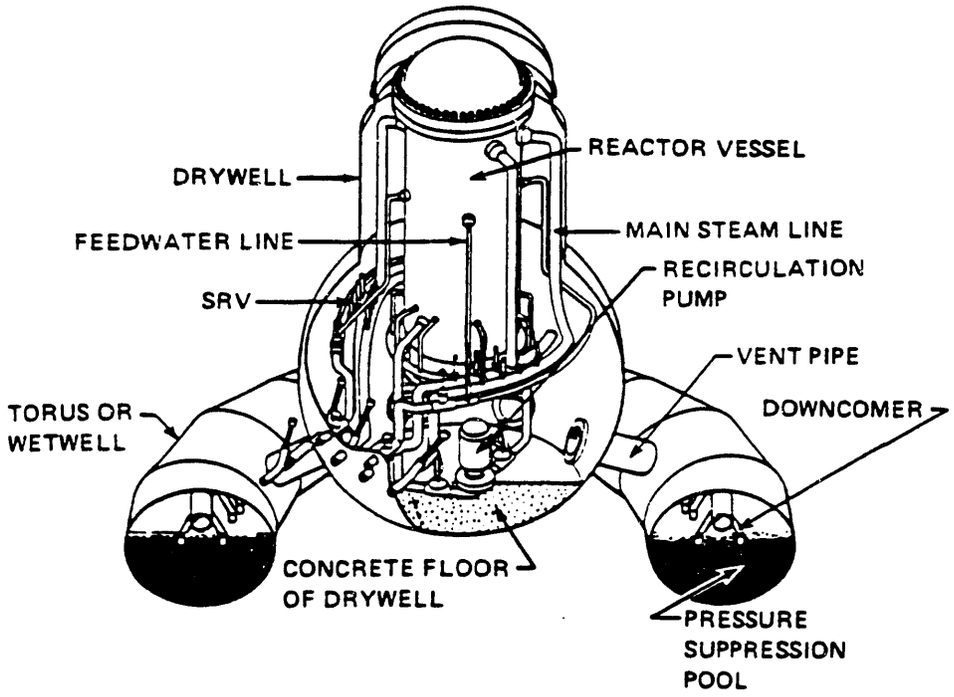

Fig. 3. The reactor vessel safety/relief valves are located on the horizontal runs of the main steam lines, near the bottom of the vessel.

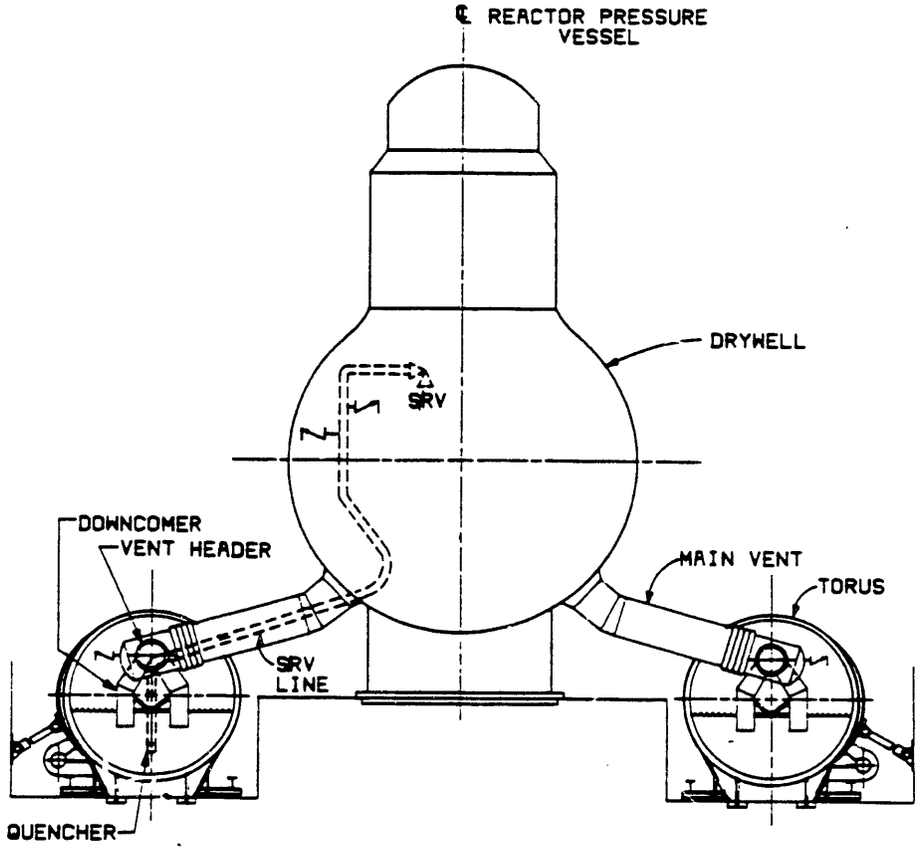

Fig. 4. Location of a typical safety/relief valve and its tailpipe within the BWR Mark I containment.

Table 3. Effect of drywell flooding upon time of debris release from the reactor vessel for the short-term station blackout accident sequence based upon Peach Bottom/Browns Ferry

Drywell Flooded	Skirt Vented	Reactor Vessel Depressurized	Release Mechanism	Time to Failure	
				Minutes	Hours
No	—	Yes	Penetration Failures	250	4.2
No	—	Yes	Bottom Head Creep Rupture	600 – 640	10.0 – 10.7
Yes	No	No	Bottom Head Creep Rupture	660 – 700	11.0 – 11.7
Yes	No	Yes	Bottom Head Creep Rupture	780 – 840	13.0 – 14.0
Yes	Partial	Yes	Bottom Head Creep Rupture	840 – 900	14.0 – 15.0
Yes	Complete	Yes	Melting of Upper Vessel Wall	>1200	>20.0

The most important disadvantage of a drywell flooding strategy for existing plants is the requirement for venting to the external atmosphere while the containment is being filled by the low-pressure pumping systems and during the subsequent steaming from the water surrounding the reactor vessel bottom head. Because of this, implementation of the drywell flooding strategy would initiate a noble gas release to the surrounding atmosphere as well as a limited escape of fission product particulates. All particulate matter released from the reactor vessel prior to failure of the vessel wall would enter the pressure suppression pool via the safety/relief valve T-quenchers and would be scrubbed by passage through the water in both the wetwell and drywell. Therefore, the concentration of particulates in the drywell atmosphere and any release through the drywell vents would remain small as long as the reactor vessel wall remained intact.

Creep rupture of the vessel bottom head beneath the support skirt attachment would release debris into the water-filled pedestal region to fall downward onto the drywell floor. Since containment flooding would provide a water depth of more than 9 m (30 ft) over the drywell floor, the particulate matter released from the debris mass should be adequately scrubbed provided,

of course, that violent steam explosions do not occur. Furthermore, the large volume of water in the drywell would protect the drywell shell from failure in Mark I containment facilities.

The advantages and disadvantages of a drywell flooding strategy for existing BWR facilities are summarized in Table 4. The listed advantages involve significant contributions to accident mitigation, which have previously been discussed. The listed disadvantages, however, are also important and will be discussed in the following paragraphs.

Table 4. Advantages and disadvantages of a drywell flooding strategy for severe accident mitigation in existing BWR facilities

Advantages	1. Prevent failure of the bottom head penetrations and vessel drain 2. Increased scrubbing of fission product particulate matter 3. Delay creep rupture of the reactor vessel bottom head 4. Prevent failure of the Mark I drywell shell when core debris does leave the vessel
Disadvantages	1. Requires availability of power source and pump capable of filling the drywell to the level of the vessel bottom head within 150 minutes under station blackout conditions. 2. Requires that the drywell be vented.

First, implementation of the proposed strategy would require equipment modifications and additions. Although there may be plant-specific exceptions, containment flooding with the existing pumping systems would require too much time; furthermore, the existing systems would not be available for the dominant station blackout accident sequences. What is needed is a reliable ability to sufficiently flood the drywell within a short period of time, since it would be unrealistic to expect that emergency procedures would call for containment flooding (and the associated undesirable effects upon installed drywell equipment) until after core degradation had begun. If the water did not reach the vessel bottom head until after lower plenum debris bed dryout and the initial heating of the vessel wall, it would be too late to prevent penetration assembly failures.

The second disadvantage, that the drywell vents would have to be opened to permit flooding of the containment, is particularly undesirable since it would involve early release of the fission product noble gases, beginning soon after the onset of core degradation. After the water had contacted the vessel bottom head, a continuous steam generation would begin within the

drywell that would be released to the outside atmosphere by means of the open vents. This would tend to sweep any particulate matter from the drywell atmosphere through the vents. The amount of particulate matter reaching the drywell atmosphere would, however, be limited by water scrubbing as long as the reactor vessel wall remained intact above the water level in the drywell. This is expected to be the case for the existing BWR facilities where the ultimate failure of the wall would occur by creep rupture beneath the skirt attachment weld.

It is interesting, however, to briefly consider the potential benefits of application of a drywell flooding strategy to future BWR facilities, where the disadvantages listed in Table 4 might be avoided by appropriate plant design. Much less water would be required since the reactor vessel would be located in a cavity instead of suspended high above a flat drywell floor. Provision could be made for complete venting of the reactor vessel support skirt so that all of the bottom head would be in contact with water. This would preclude creep rupture of the vessel bottom head, shifting the potential failure mode to melting of the upper vessel wall, above the water level in the drywell.

For the existing BWR facilities, failure of the upper reactor vessel wall would provide a direct path from the upper surface of the debris pool to the open drywell vents without the benefit of water scrubbing. This corresponds to the last entry in Table 3, which is based upon complete venting of the vessel support skirt (not considered practical for the existing facilities). For future plant designs, the potential for a direct release pathway could be avoided in two ways. First, complete vessel submergence would preclude failure of the upper vessel wall. Second, the requirement for containment venting could be eliminated by provision of an adequate water source within the containment and provision for condensation of the generated steam. Both of these approaches are within the scope of design features currently under consideration for the advanced passive design.

This study of the effectiveness of drywell flooding is currently documented by letter report (ORNL/NRC/LTR-91/9). However, it is anticipated that these results will be incorporated into a NUREG/CR report during 1992.

3. POISONING THE INJECTION SOURCE

The second recommendation developed as a result of the consideration of candidate mitigative strategies for in-vessel events during the late phase (after core degradation has occurred) of postulated BWR severe accidents addresses the prevention of undesired criticality.

If significant control blade melting and relocation were to occur during a period of temporary core uncovering, then criticality would follow restoration of reactor vessel injection capability if the core were rapidly recovered with unborated water using the high-capacity low-pressure injection systems. If the relatively slow Standby Liquid Control System (SLCS) were simultaneously initiated to inject sodium pentaborate solution, then the core would remain critical until sufficient boron for shutdown reached the core region. It would be preferable, if control blade melting and relocation has occurred, to inject only a boron solution provided that this can be done at a rate sufficient to provide core cooling and terminate core damage.

The specific goal of the proposed strategy is to provide for the addition of the boron-10 isotope together with the injected flow being used to recover the core, in sufficient quantity to preclude criticality as the water level rises within the reactor vessel. It is expected that this could be accomplished using only existing plant equipment. One way to do this would be to mix the boron directly with the water in the condensate storage tank and then take suction on the condensate storage tank with the low-pressure system pump to be used for vessel injection. It is, however, not a simple matter to invoke this strategy and preplanning and training would be required.

With respect to the rationale for incorporation of this strategy, a recent Pacific Northwest Laboratory (PNL) report[30] establishes that criticality upon reflooding with unborated water is likely for either standing fuel rods or for a debris bed subsequently formed in the core region. It is not unreasonable that this prediction alone should provide sufficient motivation for incorporation of a boration strategy since there is a strong potential for operator surprise and confusion should, for example, a station blackout accident sequence be converted into an ATWS-type sequence upon restoration of reactor vessel injection capability. However, the PNL report makes the conclusion that:

> "— it appears that a super prompt-critical excursion (in which some fuel vaporization, dispersal of molten fuel debris, rapid molten fuel-coolant interaction, and the production of a large pressure pulse capable of directly failing the vessel and/or containment occurs) is not credible under conditions of reflooding a hot, degraded core; even under conditions of maximum reflood rate. Doppler feedback, in itself, appears to be adequate to limit the energetics of reflood recriticality to a level below which the vessel would be threatened by a pressure pulse. It is more likely that the reactor would either achieve a quasi-steady power level or enter an oscillatory mode in which water periodically enters and is expelled from the core debris. In either case, the average power level achieved is determined by the balance between reactivity added and the feedback mechanisms. Criticality in debris beds will probably produce power levels no larger than 10 to 20 percent of normal power. At these levels, the coolant makeup systems could provide adequate coolant to remove the heat generated within the debris bed."

Thus, one might conclude that the criticality attendant to reflooding could be controlled in the same manner as an ATWS, that it could be terminated by normal means [use of the SLCS], and that no dedicated strategy for preventing the criticality is required.

Nevertheless, criticality produced by reflooding after core damage has characteristics very different from those associated with ATWS, including not being addressed by current procedures, the probable lack of nuclear instrumentation, and the factor of operator surprise. The configuration of the critical masses in the core region might be standing fuel rods alone, a combination of standing fuel rods (outer core) and debris beds (central core), or a core-wide debris bed. Consultation with Dr. Jose March-Leuba of ORNL, who has recently performed a series of BWR stability calculations[31], reveals that there is a potential for much more serious consequences of criticality by rapid reflooding than those indicated by the PNL report. While he does not recommend any further attempts at this time to calculate a power-vs-time profile for reflooding without control blades (the state of the art would not permit a definitive result), he does believe that the current state of knowledge, based upon available information from previous calculations, supports a conclusion that preventative measures are desirable.

The PNL report provides the estimate that a boron-10 concentration of between 700 and 1000 ppm would be required within the reactor vessel to preclude criticality once control blade melting had occurred. The next Section describes the concentration achievable with the SLCS.

3.1 INJECTION WITH THE STANDBY LIQUID CONTROL SYSTEM

The normal means of adding boron to the reactor vessel is by dedicated injection by the Standby Liquid Control System (SLCS). While this system is designed to inject sufficient neutron-absorbing sodium pentaborate solution into the reactor vessel to shut down the reactor from full power (independent of any control rod motion) and to maintain the reactor subcritical during cooldown to ambient conditions, the SLCS is not intended to provide a backup for the rapid shutdown normally achieved by scram.

As indicated in Figure 5, the basic system comprises a heated storage tank, two 100% capacity positive displacement pumps, and, as the only barrier to injection to the reactor vessel, two explosive squib valves. In most of the current BWR facilities, the sodium pentaborate solution enters the reactor vessel via a single vertical sparger located at one side of the lower plenum just below the core plate as indicated in Figures 6 and 7. An effort to improve the mixing and diffusion of the injected solution (which has a specific gravity of about 1.3) throughout the core region has lead some BWR facilities to provide a third positive displacement pump and to cause the injected solution to enter the reactor vessel via the core spray line and sparger.

For the purpose of reducing the time required for reactor shutdown for the ATWS accident sequence, the NRC has recently required that the SLCS injection be at a rate *equivalent* to 86 gpm of 13-weight percent sodium pentaborate solution, the boron being in its natural state with 19.8 atom percent of the boron-10 isotope.* This requirement is established by the "ATWS rule," which states, in part:

> "Each boiling water reactor must have a standby liquid control system (SLCS) with a minimum flow capacity and boron content equivalent in control capacity to 86 gallons per minute of 13-weight percent sodium pentaborate solution."[32]

Since the original SLCS standard design provided for single-pump operation at a rate of 43 gpm, the ATWS rule permits the requirement for the increased equivalent control capacity to be satisfied by simultaneous operation of both of the installed pumps, by increasing the concentration of sodium pentaborate solution, or by enriching the boron within the sodium pentaborate solution in the isotope boron-10. Different BWR facilities have taken different approaches.

The sodium pentaborate solution is normally prepared by dissolving stoichiometric quantities of borax and boric acid within hot demineralized water according to the reaction**

$$Na_2B_4O_7 \cdot 10H_2O + 6H_3BO_3 \rightarrow Na_2B_{10}O_{16} \cdot 10H_2O + 9H_2O.$$

As an illustrative example based upon a representative volume of the standby liquid control solution tank, 4076 lbs of borax and 3963 lbs of boric acid crystals dissolved within

---

* It is the ${}_5B^{10}$ isotope that has the large absorption cross section (3840 barns). The reaction is ${}_5B^{10} + {}_0n^1 \rightarrow {}_3Li^7 + {}_2He^4$.

** As written, the reaction shows equivalent sodium pentaborate as a product.

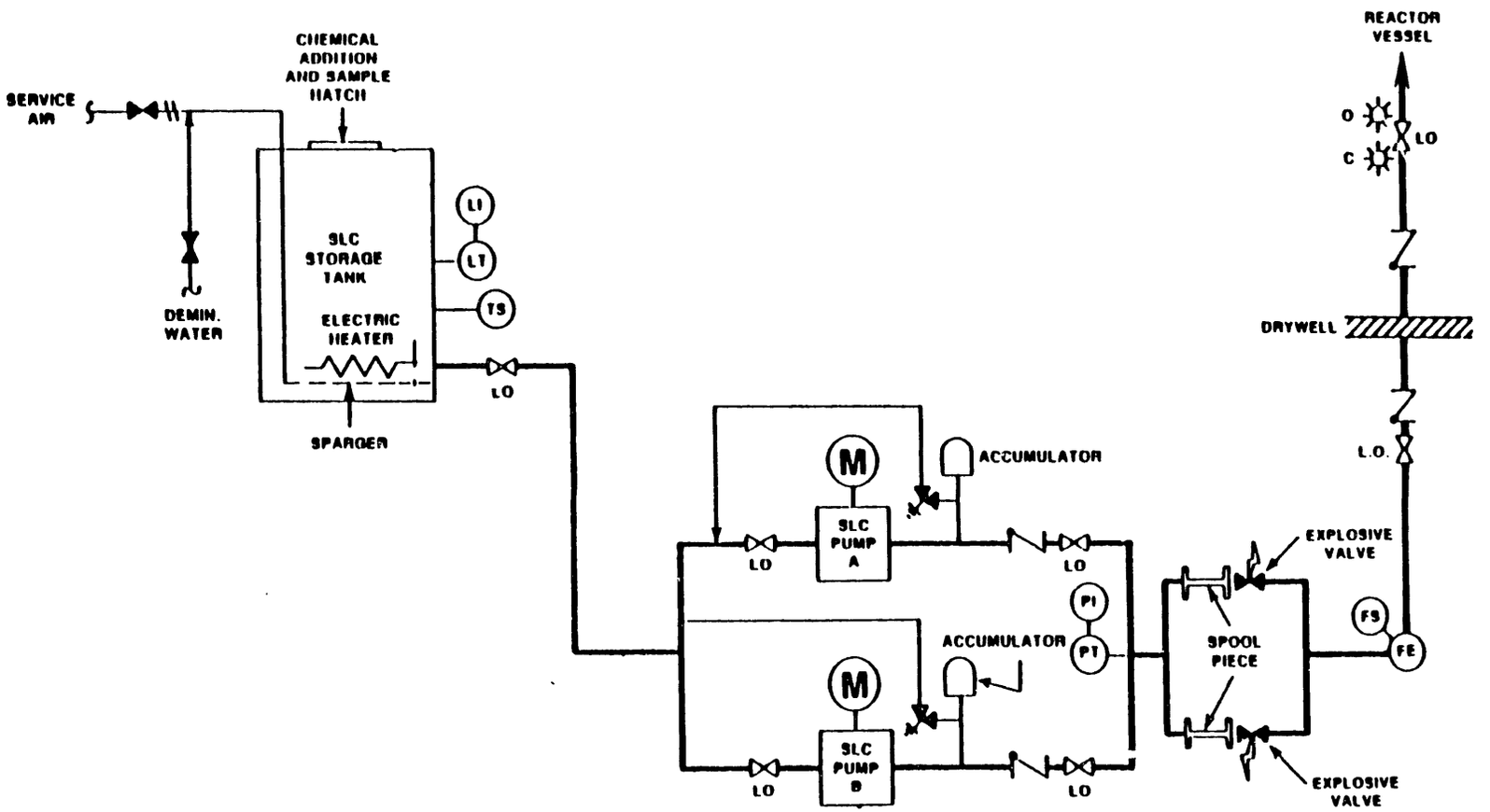

Fig. 5. Abbreviated schematic of the typical BWR standby liquid control system (SLCS). For clarity, all piping exclusively dedicated to system testing has been deleted from this drawing.

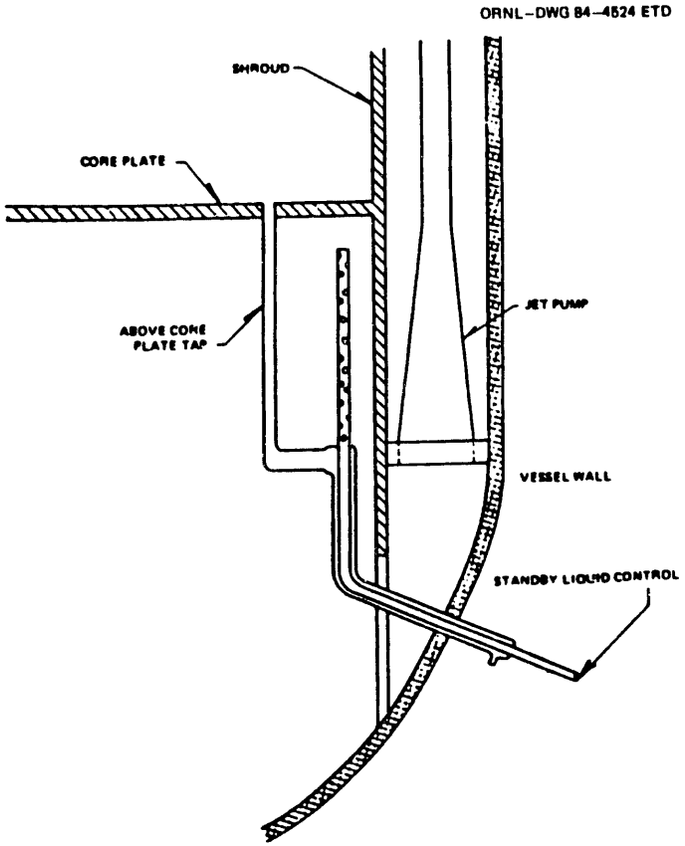

Fig. 6. Location of standby liquid control system injection sparger within the BWR-4 reactor vessel.

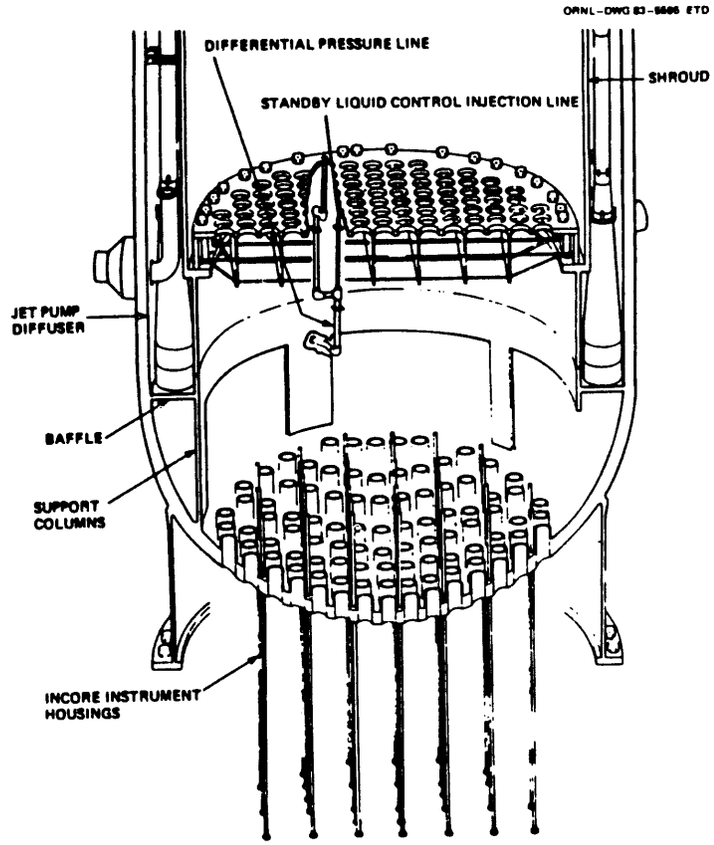

Fig. 7. The differential pressure and standby liquid control system injection line enters the reactor vessel as two concentric pipes, which separate in the lower plenum. The inner pipe, which terminates with a perforated length below the core plate is used during normal operation to sense the below-plate pressure and is used for sodium pentaborate injection when required. The outer pipe terminates immediately above the core plate and senses the pressure in the interstitial region of the core.

4608 gallons of water will produce an aqueous solution containing 6305 lbs of sodium pentaborate. This is 13.6% sodium pentaborate by weight. The tank contains 1155 lbs of boron and, assuming that the boron is in its natural state (not enriched), 228.5 lbs of the boron-10 isotope.

Continuing the example, the SLC tank contains 46,360 lbs of solution so the concentration of natural boron within the tank would be 24,900 ppm. Since the mass of water within the reactor vessel (at normal water level and operating temperature) is 628,300 lbs,** the concentration of natural boron within the reactor vessel after the contents of the SLC tank had been added would be approximately 1840 ppm (the concentration of the boron-10 isotope would be about 360 ppm).

After the reactor had been brought subcritical, the next steps toward complete shutdown would involve cooldown and vessel filling. The reactor vessel water mass with normal water level at 70°F would be 850,000 lbs so that water addition during cooldown would reduce the concentration of natural boron to 1360 ppm. Finally, with the vessel completely filled after cooldown, the water mass would be 1,400,000 lbs and the natural boron concentration would be 825 ppm. With the boron in its natural state, the concentration of the boron-10 isotope would be 163 ppm, which is sufficient to maintain the core shutdown in the cold, xenon-free condition.

Thus, the basic operational concept of the SLCS for ATWS control is that the very high concentration of boron in the relatively small SLC tank is diluted to the desired value when pumped into the much larger reactor vessel and mixed with the vessel water inventory.

Where BWR facilities have chosen to enrich the sodium pentaborate solution in the boron-10 isotope rather than to increase the pumping rate, it is the boric acid constituent that is enriched, typically to 92 atom percent. This approach maintains the SLCS redundancy of having two pumps capable of independent operation.

Under severe accident conditions, injection of neutron poison may be required for a situation very different than that normally associated with ATWS. If significant control blade melting and relocation from the core region were to occur during a period of temporary core uncovering, then criticality should be expected if reactor vessel injection capability is restored and the core is then covered with cold unborated water.[30] This situation is most likely to occur with restoration of electrical power after a period of station blackout. If the SLCS were used to inject the sodium pentaborate solution at a relatively slow rate while the core was rapidly covered using the high-capacity low-pressure injection systems, then criticality would occur and the core would remain critical until sufficient boron for shutdown reached the core region.

It would be preferable, if control blade melting and relocation has occurred, to reflood the vessel from an injection source such as the condensate storage tank containing a premixed solution of neutron poison so that there would be no threat of criticality as the core was recovered. This must be achievable, however, at a rate sufficient to provide immediate core cooling and, thereby, terminate core damage. The major diagnostic concern with respect to this strategy is that the operators would have no direct means of knowing whether or not significant control blade melting and relocation had occurred. Therefore, either the injection source would have to be poisoned after any non-trivial period of core uncovering or reliance would have to be made on precalculated values of time to control blade melting for the various accident situations.

** Water mass for a 251-inch ID BWR 3/4 reactor vessel, including the recirculation loops at the hot rated condition.

3.2 AN ALTERNATIVE METHOD OF FORMING THE POISON SOURCE

On two counts, operation of the SLCS would not prevent criticality upon vessel reflood following a period of temporary core uncovering with control blade melting. First, the injection of poison by this system would be too slow. Second, the amount of poison injected would be insufficient. Based upon the recent PNL analysis,[30] a concentration of 700-1000 ppm of the boron-10 isotope would be required to ensure that criticality would not occur as the damaged core was covered. As discussed in Section 3.1, the concentration provided by operation of the SLCS is less than 200 ppm.

In addition, formation of sodium pentaborate by the normal method of separately adding borax and boric acid crystals would not be feasible at low temperatures and without mechanical mixing. Information concerning an alternative boron form was obtained by contacting the U.S. Borax Company at Montvale, NJ. The Company produces a disodium octaborate tetrahydrate ($Na_2B_8O_{13} \cdot 4H_2O$) in readily soluble powder form, under the tradename Polybor. Boron constitutes 20.97% of the total weight of Polybor, as opposed to 18.32% of the weight of sodium pentaborate. Using Polybor, the total amount of material needed to form a given concentration of natural boron is significantly (about one-third) less than for borax and boric acid. For example, preparation of a concentration of 24,900 ppm within 4,608 gallons of water (as in the example of Section 3.1) would require the addition of 8,039 lbs of borax and boric acid, but only 5,171 lbs of Polybor. Much of the difference lies in the excess water added with the borax ($Na_2B_4O_7 \cdot 10H_2O$).

The chief industrial use of Polybor is for fire retardant treatment of lumber by heavy spray application or by immersion of decorative and other cellulosic materials. It readily dissolves in water, forming supersaturated solutions. The following Table, supplied by the U.S. Borax Company, indicates its superior solubility (under equilibrium conditions) in water.

Table 5. Solubility of Polybor in water and corresponding concentrations of B_2O_3 compared with Borax at the same temperature

Temperature K	Temperature °F	weight % Polybor	% Concentration of B_2O_3 in saturated solutions of: Polybor	Borax
273	32	2.4	1.6	0.73
283	50	4.5	3.0	1.13
293	68	9.5	6.3	1.72
303	86	21.9	14.5	2.63
313	104	27.8	18.4	4.10
323	122	32.0	21.2	6.54
333	140	35.0	23.2	11.07
348	167	39.3	26.0	14.67
367	201	45.3	30.0	21.00

Polybor dissolves even in cool water to give supersaturated solutions of considerably higher concentration than indicated in Table 5. Simple table-top experiments at Oak Ridge have demonstrated that Polybor dissolves much more readily in water than does the normally used mixture of borax and boric acid crystals. (There is no need for two separate powders to interact in the case of Polybor.) This is of interest because the accident management strategy under consideration must be capable of use under station blackout conditions, when the water in the condensate storage tank may have cooled significantly at the time the borated solution was to be prepared and mechanical mixing of the tank contents would not be available.

3.3 PREPARING THE INJECTION SOURCE

The condensate storage tank is an important source of water to the reactor vessel injection systems. As indicated in Figure 8 (based upon the Browns Ferry arrangement), it is the normal suction source for the steam turbine-driven high pressure coolant injection (HPCI) and reactor core isolation cooling (RCIC) systems and the alternate source for the electric motor-driven residual heat removal (RHR) and core spray (CS) pumps. Other BWR facilities also have at least one motor-driven reactor vessel injection system capable of taking suction upon the condensate storage tank (CST). At least one BWR facility currently has in place a procedure for adding borax and boric acid crystals directly to the (partially drained) CST, for use as backup to the SLCS if needed in the event of ATWS.[33]

As discussed previously, a much higher concentration of boron would be required for the prevention of criticality for the case of a degraded core than would be required for the control of ATWS. The requirement stated in Reference 30 is for a concentration of 700–1000 ppm of the boron-10 isotope, which is 4 to 6 times greater than the reactor vessel concentration (163 ppm) obtained by operation of the SLCS.

During normal reactor operation, the CST provides makeup flow to the main condenser hotwells via an internal tank standpipe, as indicated on Figure 9. Any practical strategy for direct poisoning of the CST must provide for partial draining of this tank, particularly if boron-10 concentrations greater than 700 ppm are to be achieved. The CST could be gravity-drained through the standpipe under station blackout conditions. The residual water volume would be plant-specific, but a representative value for a 1060 MWe BWR-4 facility such as Browns Ferry is 135,000 gal (511 m^3).

Even with partial CST draining, however, the amount of powder required to obtain a boron-10 concentration of 1000 ppm is large. Assuming the use of Polybor to take advantage of its greater solubility, 27,775 lbs (12,600 kg) would have to be added to the partially drained tank. [If borax/boric acid were used, the requirement would be 41,000 lbs (18,600 kg).] Clearly, this is too much to be manhandled [50-lb (23-kg) bags] to the top of the tank and poured in. The practical way to poison the CST would be to prepare a slurry of extremely high concentration in a smaller tank at ground level; then to pump the contents of this small tank into the upper opening of the CST. (As indicated in Table 5, extremely high concentrations can be achieved with Polybor.) To avoid any requirement for procurement of additional plant equipment, a fire engine with its portable suction tank might be employed to perform the pumping function.

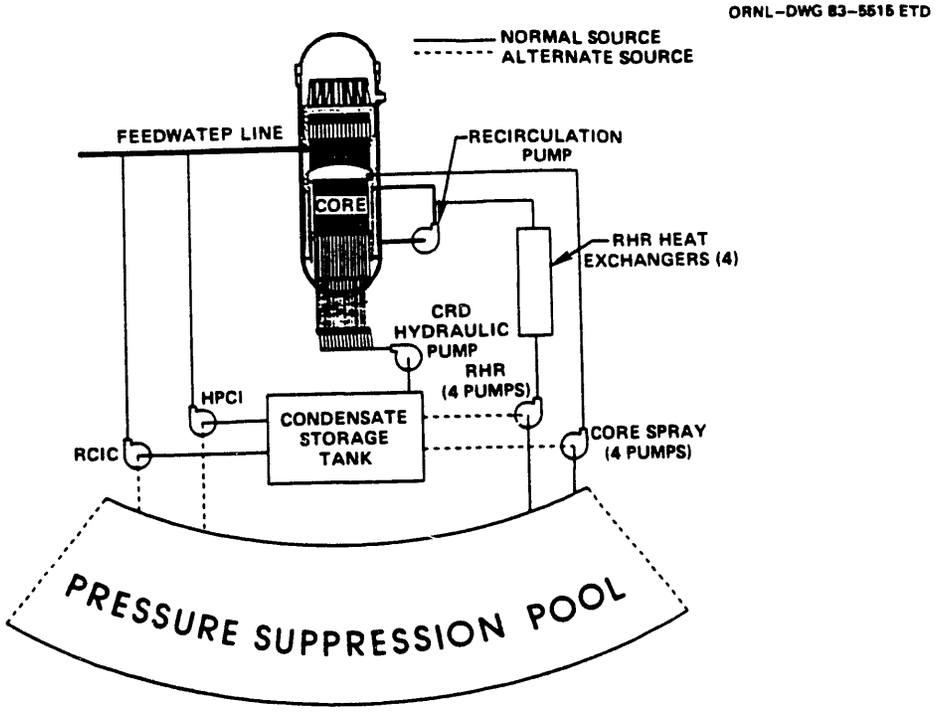

Fig. 8. The condensate storage tank is an important source of water for use in accident sequences other than large-break LOCA.

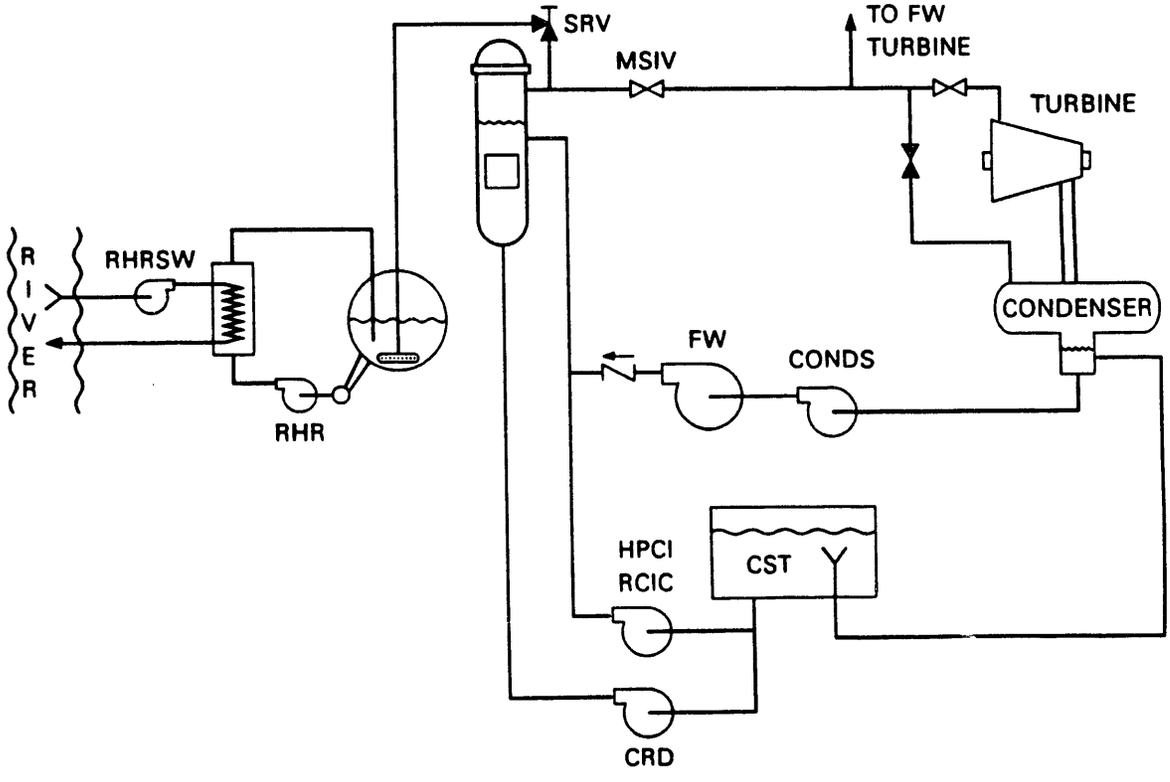

Fig. 9. The condensate storage tank can be drained to the main condenser hotwells via the internal standpipe, leaving a sufficient volume for reactor vessel injection.

4. SUMMARY

A recently completed Oak Ridge effort proposes two management strategies for mitigation of the events that might occur in-vessel after the onset of significant core damage in a BWR severe accident. While the probability of such an accident is extremely low, there may be effective yet inexpensive mitigation measures that could be implemented employing the existing plant equipment and requiring only additions to the plant emergency procedures. In this spirit, accident management strategies have been proposed for use of a borated solution for reactor vessel refill should control blade damage occur during a period of temporary core dryout and for containment flooding to maintain the core debris within the reactor vessel if the injection systems cannot be restored.

The proposed severe accident management strategy for poisoning of the water used for vessel reflood should injection systems be restored after control blade damage has occurred has great promise for practical implementation. It could be accomplished using only the existing plant equipment but employing a different chemical form for the boron poison. Available information concerning the poison concentration required indicates that much more boron would have to be injected than is available in the Standby Liquid Control System. Furthermore, the dominant BWR severe accident sequence is Station Blackout and without means for mechanical stirring or heating of the injection source, the question of being able to form the poisoned solution under accident conditions becomes of supreme importance. Hence the need for the alternate chemical form.

On the other hand, the proposed strategy for drywell flooding to cool the reactor vessel bottom head and prevent the core and structure debris from escaping to the drywell holds less promise. Although drywell flooding would preclude bottom head penetration failures and thereby greatly delay the release of debris, the bottom head would eventually fail by creep rupture. This is a consequence of not being able to completely surround the bottom head with water because of the gas pocket that would be trapped beneath the vessel support skirt. Since the drywell vents would have to remain open during and after the flooding process, the ultimate failure of the vessel wall would open a direct pathway for escape of fission products to the atmosphere. This strategy does, however, have potential for future plant designs for which gas release pathways might be provided for the vessel skirt and passive methods might be employed to completely submerge the reactor vessel under severe accident conditions without the need for containment venting.

5. REFERENCES

1. Greene, S. R., *Realistic Simulation of Severe Accidents in BWRs - Computer Modeling Requirements,* NUREG/CR-2940, ORNL/TM-8517, Oak Ridge National Laboratory, April 1984.
2. Ott, L. J., "Advanced Severe Accident Response Models for BWR Application," *Nuclear Engineering and Design,* No. 115, 1989, p. 289-303.

3. Hodge, S. A., "Thermalhydraulic Processes in the Reactor Coolant System of a BWR Under Severe Accident Conditions," Proceedings, ICHMT International Seminar on Heat and Mass Transfer Aspects of Fission Product Releases, Dubrovnik, Yugoslavia, May 1989.

4. Hodge, S. A., "BWR Reactor Vessel Bottom Head Failure Modes," Proceedings, ICHMT International Seminar on Heat and Mass Transfer Aspects of Fission Product Releases, Dubrovnik, Yugoslavia, May 1989.

5. Hodge, S. A. and Harrington, R. M., *Considerations Regarding Certain Aspects of Severe Accident Mitigation Afforded by Operation of Shoreham at Reduced Power,* letter report (ORNL/M-1011) to Mr. S. Singh Bajwa, Risk Applications Branch, NRR, USNRC, dated June 12, 1987.

6. Hodge, S. A., Hyman, C. R., and Ott, L. J., *Boiling Water Reactor Severe Accident Technology at Oak Ridge - Purpose and Goals -,* letter report (ORNL/M-1017) to Dr. Thomas J. Walker, Accident Evaluation Branch, Division of Systems Research, RES, USNRC, dated December 6, 1988.

7. *Severe Accident Risks: An Assessment for Five U.S. Nuclear Power Plants,* NUREG-1150, December 1990.

8. Cook, D. H. et al., *Station Blackout at Browns Ferry Unit One - Accident Sequence Analysis,* Vol. 1, NUREG/CR-2182, ORNL/NUREG/TM-455/V1, November 1981.

9. Wichner, R. P. et al., *Station Blackout at Browns Ferry Unit One - Iodine and Noble Gas Distribution and Release,* Vol. 2, NUREG/CR-2182, ORNL/NUREG/TM-455/V2, August 1982.

10. Condon, W. A. et al., *SBLOCA Outside Containment at Browns Ferry Unit One - Accident Sequence Analysis,* Vol. 1, NUREG/CR-2672, ORNL/TM-8119/V1, October 1982.

11. Wichner, R. P. et al., *SBLOCA Outside Containment at Browns Ferry Unit One - Iodine, Cesium, and Noble Gas Distribution and Release,* Vol. 2, NUREG/CR-2672, ORNL/TM-8119/V2, September 1983.

12. Cook, D. H. et al., *Loss of DHR Sequences at Browns Ferry Unit One - Accident Sequence Analysis,* Vol. 1, NUREG/CR-2973, ORNL/TM-8532, May 1983.

13. Harrington, R. M. and Ott, L. J., *The Effect of Small-Capacity, High-Pressure Injection Systems on TQUV Sequences at Browns Ferry Unit One,* NUREG/CR-3179, ORNL/TM-8635, September 1983.

14. Harrington, R. M. and Hodge, S. A., *ATWS at Browns Ferry Unit One - Accident Sequence Analysis,* NUREG/CR-3470, ORNL/TM-8902, July 1984.

15. Wichner, R. P. et al., *Noble Gas Iodine, and Cesium Transport in a Postulated Loss of Decay Heat Removal Accident at Browns Ferry,* NUREG/CR-3617, ORNL/TM-9028, August 1984.

16. Harrington, R. M., *Evaluation of Operator Action Strategies for Mitigation of MSIV-Closure Initiated ATWS,* letter report to Dr. Thomas J. Walker, Accident Evaluation Branch, Division of Systems Research, RES, USNRC, dated November 11, 1985.

17. Harrington, R. M., *The Effect of Reactor Vessel Pressure and Water Level on Equilibrium BWR Core Thermal Power During MSIV-Closure-Initiated ATWS,* letter report to Dr. Thomas J. Walker, Accident Evaluation Branch, Division of Systems Research, RES, USNRC, dated January 10, 1986.

18. Harrington, R. M. and Hodge, S. A., *Loss of Control Air at Browns Ferry Unit One - Accident Sequence Analysis,* NUREG/CR-4413, ORNL/TM-9826, January 10, 1986.

19. Harrington, R. M. and Hodge, S. A., *Containment Venting as a Severe Accident Mitigation Technique for BWR Plants with Mark 1 Containment,* letter report to Dr. Thomas J. Walker, Accident Evaluation Branch, Division of Systems Research, RES, USNRC, dated June 26, 1986.

20. Ott, L. J. and Hodge, S. A., *Modeling of Time-Dependent Emergence of Core Debris from a Boiling Water Reactor Under Severe Accident Conditions,* letter report (ORNL/M-

1015), to Dr. Thomas J. Walker, Accident Evaluation Branch, Division of Systems Research, RES, USNRC, dated April 22, 1988.

21. Hodge, S. A., *Failure Modes of the BWR Reactor Vessel Bottom Head,* letter report (ORNL/M-1019), to Dr. Thomas J. Walker, Accident Evaluation Branch, Division of Systems Research, RES, USNRC, dated May 10, 1989.

22. Hodge, S. A. and Ott, L. J., "BWRSAR Calculations of Reactor Vessel Debris Pours for Peach Bottom Short-Term Station Blackout," *Nuclear Engineering and Design,* No. 121, 1990, p. 327-339.

23. *BWR Owners' Group Emergency Procedure Guidelines,* Revision 4, General Electric Topical Report NEDO-31331, March 1987.

24. Lucas, W. J., Vandenkieboom, J. J., and Lehner, J. R., *Assessment of Candidate Accident Management Strategies,* NUREG/CR-5474, BNL-NUREG-52221, March 1990.

25. Hodge, S. A., *Accident Management for Critical BWR Severe Accident Sequences–Assessment of Current Status,* letter report ORNL/NRC/LTR-90/12 to Dr. James T. Han, Reactor and Plant Systems Branch, Division of Systems Research, RES, USNRC, May 31, 1990.

26. Hodge, S. A., *BWR (In-Vessel) Late Accident Mitigation Strategies,* letter report ORNL/NRC/LTR-90/18 to Dr. James T. Han, Reactor and Plant Systems Branch, Division of Systems Research, RES, USNRC, September 15, 1990.

27. Hodge, S. A., *Recommendations for Further Assessment of Certain BWR (In-Vessel) Late Accident Mitigation Strategies,* letter report ORNL/NRC/LTR-90/19 to Dr. James T. Han, Reactor and Plant Systems Branch, Division of Systems Research, RES, USNRC, September 25, 1990.

28. *Individual Plant Examination for Severe Accident Vulnerabilities - 10CFR50.54(f),* USNRC Generic Letter No. 88-20, November 23, 1988.

29. *Individual Plant Examination: Submittal Guidance, NUREG-1335,* USNRC, Final Report, August 1989.

30. Scott, W. B., et al., *Recriticality in a BWR Following a Core Damage Event,* NUREG/CR-5653, PNL-7476, December 1990.

31. March-Leuba, J., *Stability Calculations for the Grand Gulf-1 and Susquehanna-2 Boiling Water Reactors,* letter report (ORNL/NRC/LTR-87/08) to Mr. T. L. Huang, Office of Nuclear Reactor Regulation, USNRC, September 1987.

32. 10 CFR 50.62, *Requirements for Reduction of Risk from Anticipated Transients Without Scram (ATWS) Events for Light-Water-Cooled Nuclear Power Plants,* Paragraph (c) (4).

33. *NRC Inspection Report No. 50-416/91-02,* enclosure to letter from Thomas A. Peebles, Chief Operations Branch, Division of Reactor Safety to Mr. W. T. Cottle, Vice President Operations-Grand Gulf, Entergy Operations, Inc., Subject: NRC Inspection Report No. 50-416/91-02, dated February 14, 1991.

END

DATE FILMED

01 / 15 / 92