Desalination 336 (2014) 32–49

Contents lists available at ScienceDirect

Desalination

journal homepage: www.elsevier.com/locate/desal

Comparative study of brine management technologies for desalination plants

José Morillo [a], José Usero [a], Daniel Rosado [a], Hicham El Bakouri [b,*], Abel Riaza [b], Francisco-Javier Bernaola [b]

[a] Department of Chemical and Environmental Engineering, University of Seville, 41092 Seville, Spain
[b] Abengoa S.L., Research Development Center, Prolongación c/ Don Remondo s/n, Barriada Fuente del Rey, 41703 Dos Hermanas, Spain

HIGHLIGHTS

- Brine management systems for desalination plants
- Technologies for reducing the volume of the generated brines
- Technologies for salts recovery form brines
- Brine conditioning for other processes

ARTICLE INFO

Article history:
Received 11 October 2013
Received in revised form 30 December 2013
Accepted 31 December 2013
Available online xxxx

Keywords:
Seawater desalination
Reverse osmosis
Brine treatment
Water recovery
Salt recovery

ABSTRACT

In recent years, reverse osmosis (RO) has grown as an alternative to traditional potable water sources. A major disadvantage of the RO process is the huge amount of brine and its negative impact as a result of its high salinity. This brine is usually discharged to inland water bodies or to the sea and constitutes a threat to ecosystems and species, such as *Posidonia oceanica* in the Mediterranean Sea; thus, further research is needed for introducing environmentally friendly and economically viable management options for RO brines.

This paper gives an overview of recent research as well as different technologies available at several scales to overcome the environmental problems and evaluate profitability related to discharge of RO concentrates. The treatment options have been classified into four different groups according to their final purpose: 1) technologies for reducing and eliminating brine disposal, 2) technologies for commercial salt recovery, 3) brine adaptation for industrial uses and 4) metal recovery. Solar evaporation, two-stage reverse osmosis, electrodialysis, integrated processes and brine adaptation for the chlor-alkali industry are some of the topics that this paper deals with. In the conclusion section, all of the technologies are compared emphasizing all their advantages and drawbacks, feasibility and development stage in order to provide a decision tool to select the best technology for each situation.

1. Introduction

Potable water production has become a worldwide concern; for many communities, projected population growth and associated demand exceed conventional available water resources. Over 1 billion people have no access to clean drinking water and approximately 2.3 billion people (41% of the world population) live in regions with water shortages [1]. The shortage of water supplies for drinking and irrigation purposes is already a very serious problem for the North African countries, the Middle East and several countries in Southeast Asia and Latin America. If nothing is done, acute water shortages will also occur in many countries of the European Union and the northern Mediterranean by 2020, such as Greece, Italy (southern regions and islands), Portugal (Alentejo and Algarve regions and islands such as Porto Santo, Corvo, etc.) and Spain (southern and eastern regions). For the entire Mediterranean region, conservative estimates indicate a water shortage of about 10 million m^3/day by the year 2020 [2].

Desalination has become an important source of drinking water production, with thermal desalination processes developing over the past 60 years and membrane processes developing over the past 40 years [3]. Today, reverse osmosis (RO) is the leading technology for new desalination installations, with a 44% share in world desalting production capacity and an 80% share in the over 15,000 desalination plants installed worldwide [3]. The Middle East has forged ahead as the leader in large-scale seawater desalination. With only 2.9% of the world's population, it holds approximately 50% of the world's production capacity. In 2005, Israel opened the world's largest seawater RO desalination plant, with a production capacity of 330,000 m^3/day, or 100 million m^3/year [4]. The use of

* Corresponding author at: R&D Center of Abengoa Water, Prolongación c/ Don Remondo s/n, Barriada Fuente del Rey, 41703 Dos Hermanas, Spain. Tel.: +34 955404963.
E-mail address: hicham.elbakouri@water.abengoa.com (H. El Bakouri).

0011-9164/$ – see front matter © 2014 Elsevier B.V. All rights reserved.
http://dx.doi.org/10.1016/j.desal.2013.12.038

membrane desalination has increased as materials have improved and costs have been reduced [3]. But the main reason why RO desalination has succeeded is because it requires less energy than thermal desalination [1]. Furthermore, improvements in membranes and energy recovery have significantly lowered the cost of RO desalination.

As a result of increased interest in RO desalination, the concern about potential environmental problems has grown. RO desalination plants extract large volumes of water and discharge a dense brine concentrate back into the environment [5]. It is widely suggested that desalination plant brines have a strong potential to detrimentally impact both physicochemical and ecological attributes of receiving environments [6]. There has been worry in Mediterranean countries about *Posidonia oceanica* for the last few years. *P. oceanica* is the most abundant sea grass species in the Mediterranean, where it covers about 40,000 km^2 of the sea floor [7] and forms large meadows from the surface to 40 m depths. In addition, it is considered a very important ecosystem and is recognized by the European Habitats Directive [8] as a habitat of priority interest. Nevertheless, meadows of *P. oceanica* have undergone regression in several coastal areas [9] and under field conditions, *P. oceanica* is very sensitive to brine discharges from desalination plants [10]. Many solutions have been developed to protect this plant, mainly based on diluting brine before disposal.

Brine disposal costs are high today, between 5 and 33% of total desalination cost [11], complicating implementation. This cost depends on the quality of the concentrate, treatment level before disposal, disposal method and the volume or quantity of concentrate [12]. Disposal costs for inland desalination plants are even higher than those for plants discharging brine into the sea [12]. Some of the options for brine disposal from inland desalination plants are deep well injection, evaporation ponds, discharge into surface water bodies, disposal to municipal sewers, concentration into solid salts and irrigation of plants tolerant to high salinity [12,13].

Due to the environmental problems that brine disposal can cause and high disposal cost, many technologies have been developed for recovery. Examples are renewable energy generation [14] and use in evaporation ponds to produce salt or chemicals for industry. Nevertheless, more investigation is needed to reduce brine quantity and to allow recovery and reuse of brine. In this review, current and emerging technologies are analyzed according to their origin, the maturity of the technologies and their final goal.

2. Technologies for reducing and eliminating brine disposal

2.1. Solar evaporation

Solar evaporation consists of leaving brine in shallow evaporation ponds, where water evaporates naturally thanks to the sun's energy. Salt is left in the evaporation ponds or is taken out for disposal [15]. Evaporation ponds are relatively easy to construct, while requiring low maintenance and little operator attention compared to mechanical systems. In addition, no mechanical equipment is required, except for the pump that conveys the wastewater to the pond, which keeps low operating costs [16]. Nevertheless, evaporation ponds for disposal of concentrate from desalination plants need to be constructed as per the design and maintained and operated properly so as not to create any environmental problem, especially with regard to groundwater pollution [16]. Liners are the most important feature of an evaporation pond and one of the major components in the construction cost. They should be impermeable to avoid brine leakages and mechanically strong to withstand stress during salt cleaning [16]. Common materials for pond liners are: polyvinyl chloride, high-density polyethylene, butyl rubber and Hypalon [17]. However, many agricultural evaporation ponds have clay liners. The use of clay liners with low permeability will substantially reduce the cost of construction, although a small number of leakages are to be expected.

Solar evaporation is a suitable technology to be used in arid regions where land is available [18]. Land is crucial because shallow ponds (ranging from 25 to 45 cm) are optimal for maximizing the rate of evaporation [16]. However, due to the quantity of terrain needed to treat large volumes, evaporation ponds have limited use, especially in wet areas, where land purchase can dramatically raise capital costs. For instance, only 6% of the installations in the US used this method of concentrate disposal up to 1993 and only 2% after 1993, always for small plants [19]. Further research is appropriate to develop new materials (such as waste products from cement factories) for lining evaporation ponds. In addition, the permeability of the clay materials should be determined under different levels of compaction and over extended periods of time under a highly saline water environment. More research in recovering salt as pure as possible is also recommended.

Wind aided intensified evaporation technology (WAIV) was patented as an alternative to evaporation ponds. This method uses wind energy to evaporate wetted surfaces, previously sprayed with brine, that are packed in high density per footprint. By deploying such surfaces in arrays with large lateral dimensions, significant height and minimal depth (e.g. 3–4 m), the wind can be exploited while it is still less than saturated with vapor and the driving force is maintained [18]. Gilron et al. [18] carried out experiments in a pilot plant and demonstrated that the evaporation ratio ($L/m^2 \cdot day$) can be improved between 50% and 90% compared to evaporations ponds. Katzir et al. [15] estimated that using WAIV technology increases the evaporation rate 10-fold over natural evaporation, which allows evaporation ponds to be 10 times smaller. They also studied WAIV technology possibilities for recovery of salts and their use as raw materials. For this purpose, RO and electrodialysis concentrates from brackish groundwater were used as feedwater. Lesico CleanTech is already exploiting WAIV technology at four different sites in Mexico, Australia and Israel [20]. In Israel, a WAIV unit with 500 m^2 of wetted surface was able to evaporate hypersaline brines at a rate of 0.55–1.7 m^3/h in a preliminary study run for over 6 months. This worked out to a 300–1000 $m^3/(day \cdot hectare)$ WAIV footprint.

WAIV technology reduces soil requirements compared to traditional evaporation ponds. Furthermore, energy needs are relatively low since the main driving force is wind dryness, which allows WAIV technology to have low operating costs and makes this technology especially suitable for areas where energy costs and air dryness are high. Although WAIV technology has advantages compared to evaporation ponds, it can also pollute groundwater, and experiments at industrial scale are necessary, especially due to the expected drop-off in efficiency relative to open-pan evaporation as one goes from isolated vertical evaporation surfaces to those in a closely packed array of surfaces [21]. Further research is needed to develop new materials that have a balance between being hydrophilic enough to allow spreading but not so hydrophilic as to reduce the effective vapor pressure. Packing should also be optimized so that it is sufficient for good enhancement of evaporation capacity per footprint without unnecessary blocking of the wind [22]. Finding new possibilities of salt recovery is also necessary.

2.2. Phytodesalination

The application of brine for crop production is limited due to low salt tolerance of most plants. However, approximately 1% of angiosperm species have evolved high salt tolerance, such that some are capable of growth and reproduction with salinities exceeding seawater [23]. These plants, usually called halophytes, allow crop production based on pure RO brine or mixtures with fresh water. Potential products that may be derived from these halophytes include oilseeds, forages, and biofuels [23]. Nevertheless, when soils are irrigated with brine, excessive sodium can limit water infiltration, drainage and evaporation, making it more difficult for plants to absorb soil moisture.

Jordan et al. [23] irrigated the halophyte forage shrub *Atriplex lentiformis* with brine from a brackish water RO plant in an agricultural

district in Marana, Arizona, in the Sonoran Desert, U.S.A. Small transplants were installed in large outdoor drainage lysimeters and drip-irrigated with RO concentrate. Biomass yield was 1.62 kg/m^2 and the average water consumption during the growing season was 1.55 times evapotranspiration (ET_0), similar to values for high-biomass crops such as alfalfa. The drainage fraction (water that exited lysimeters) was only 5% of the total input (irrigation plus precipitation) throughout the study. Glenn et al. [24] evaluated saline water volume reduction with *Atriplex nummularia* without causing a major reduction in water infiltration, drainage and evaporation over time. The results showed that *A. nummularia* can be irrigated indefinitely with 2.1–2.8 m^3/(m^2·y) of water of salinity up to 4100 ppm with a low leaching fraction (~10%) without reaching the threshold soil salinity for yield reduction. The authors concluded that *A. nummularia* has the desired attributes of a crop to recycle brine: high consumptive water use to maximize uptake, high salt tolerance to minimize the required leaching fraction, and high biomass yield to be useful as a forage. De Moura et al. [25] tested a brackish RO concentrate to grow bell pepper plants (*Capsicum annuum*) in coconut fiber substrate under greenhouse conditions. The plants were irrigated with nutrient solutions prepared with 100% brine from a desalination plant diluted with tap water at 75, 50 and 25%, and 100% tap water, giving a range of electrical conductivities of the nutrient solution (ECs) of 0.26, 0.31, 0.66, 1.00 and 1.22 S/m after the dilutions and fertilizer addition. Since bell pepper is not a halophyte, leaf area, number of marketable fruits and total and marketable yield were reduced with EC increase (the latter diminished 6.3% for each 0.1 increase of ECs above 0.26 S/m, the salinity threshold). These results suggest this crop is limited for most RO concentrates due to low tolerance to salinity.

Phytodesalination allows brine reuse in a simple manner, just by irrigating soil, as well as producing different crops as mentioned above. However, halophyte crop production is still in the experimental stage and improvements in terms of water treatment performance are necessary. According to results obtained by Glenn et al. [24] and considering an RO effluent of 16,500 m^3/day, land requirements are over 200 hm^2. In addition, some reviews conclude that halophytes have inherently low yield potential due to their salt tolerance mechanisms, limiting their usefulness as crops as compared to non-halophytes [23]. Additionally, brine use can lead to excessive sodium in soil and its drainage could raise aquifer salinity. Further research could highly improve phytodesalination by finding new halophyte species that meet the requirements and also to developments in genetics to modify existing plants.

2.3. Evaporation and crystallization systems

Many authors have studied evaporation and crystallization systems to evaluate technical and economic feasibility. Zarzo et al. [26] published an article about the research done by the companies of Sadyt and Scrinser (both in the Spanish Sacyr-Vallehermoso group) and Ecoagua on zero liquid discharge (ZLD) systems based on evaporation–crystallization technologies. That research aimed at the removal of salts from desalination plant brines to reduce the impact of the discharges and to obtain salts or by-products. Two pilot plants were installed: one at laboratory scale at the Complutense University of Madrid and the other at the Cuevas de Almanzora desalination plant (25,000 m^3/day of brackish water treated with RO). The Complutense University plant had an evaporation capacity of 7 L/h and worked in continuous mode under vacuum conditions. The energy consumption was very high, with an estimated final cost of €0.095/kg of brine evaporated. The pilot plant at the Cuevas de Almanzora desalination plant was an evaporation–crystallization plant with a flash evaporator operating under vacuum conditions and continuous feed. The plant capacity was 100 L/h, although experiments worked with a flow rate of approximately 70 L/h. The Cuevas de Almanzora desalination plant was more energy efficient than conventional evaporation–crystallization because it utilized the vapor generated in evaporation to heat the feedwater entering the evaporator.

Mickley et al. [27] did research on high recovery and zero liquid discharge technologies. They suggested many alternatives for different feedwater compositions. Those alternatives are based on combinations of RO, lime softening (LS), thermal brine concentrator (BC), thermal crystallizer (CRYST), spray dryer (SD), evaporation ponds (EP) and landfill (LF) to treat brackish water with recoveries over 96%. The study concluded that the yield of the process depends basically on salinity and water composition. They reached the same conclusion for capital and operating costs, specifying that evaporation ponds and landfills are the biggest costs. In addition, the paper emphasizes large systems requiring multiple equipment modules, thus minimizing the economy of scale.

Concentrators and crystallizers are developed at industrial scale. Nevertheless, energy requirements, mainly fossil fuels, are very high, making it difficult for them to be feasible at present. However, fossil fuels make it possible to use this technology everywhere and eliminate climate requirements compared to solar evaporation. Further research is needed to diminish energy consumption and to develop systems to recover residual heat or steam.

2.4. Membrane distillation

Membrane distillation (MD) is a non-isothermal evaporative technology that uses a hydrophobic microporous membrane being the driving force the vapor pressure difference between both membrane sides. Extended information on MD may be found in Khayet and Matsuura [28]. MD can be applied for the treatment of saline solutions with high concentrations. Vacuum membrane distillation (VMD) is a variant of MD, in which low pressure or vacuum is applied on the permeate side of the membrane module, for example by means of vacuum pump(s). The applied permeate pressure must be lower than the saturation pressure of volatile molecules to be separated from the feed solution and condensation takes place outside the membrane module at temperatures lower than the ambient temperature. Mericq et al. [29] applied VMD configuration for the treatment of RO brines (Fig. 1). Simulations were performed to optimize the VMD operating conditions and then they were completed by bench-scale experiments using synthetic RO brines containing only the mineral part of seawater with total salt concentrations up to 300 g/L. High permeate fluxes were obtained even for the highest salt concentrations. However, the permeate flux was limited at high salt concentrations by scaling, mainly due to calcium precipitation. Despite this inconvenience, scaling had only a partial impact on the permeate flux (i.e. 24% decrease for 43 L/(m^2·h) permeate with the highest salt concentration). Calcium carbonate ($CaCO_3$) and calcium sulfate ($CaSO_4$) precipitated first due to their low solubility and formed mixed crystal deposits on the membrane surface. These phenomena only occurred on the membrane surface and did not totally cover the membrane pores. The crystals were easily removed simply by washing the membrane with water. Simulations were performed to study the yield of the process with 40,000 m^3/day of 38.9 g/L seawater, achieving a recovery of 40% for VMD itself and up to 89% for overall recovery by

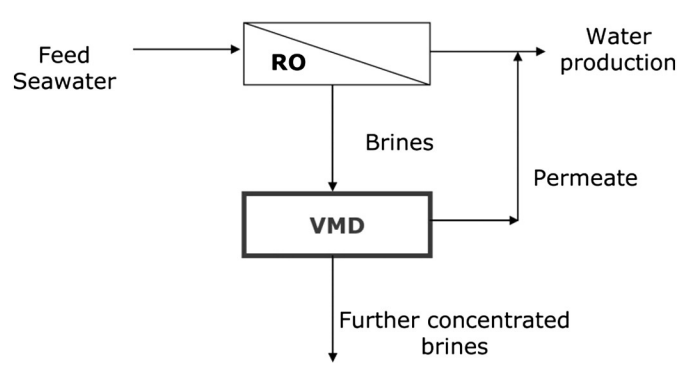

Fig. 1. Schematic of seawater desalination by RO and vacuum membrane distillation (VMD) integrated process [29].

coupling RO and VMD. Results also showed that concentrate quantity can be reduced by a factor of 5.5, making it possible to double overall water production.

Ji et al. [30] investigated the performance of membrane distillation crystallization (MDC) at bench-scale in terms of water recovery and NaCl crystallization kinetics. The extensive contact area provided by hollow fiber membranes made it possible to achieve reliable permeate fluxes at moderate temperatures (40–50 °C) with energy consumption ranging from 15 to 20 kWh/m^3, which is lower than that of conventional evaporative systems for NaCl crystallization having a specific energy consumption of 30 kWh/m^3. Experimental tests carried out on artificial RO concentrates resulted in 21 kg/m^3 production of NaCl crystals and the final water recovery factor increased up to 90%. Analogous investigations carried out on RO brines from natural seawater were affected by the presence of dissolved organic matter, showing 20% reduction in the amount of salt crystallized and 8% decrease of the permeate flux. Therefore, adequate pretreatment before the RO stage is needed to reduce the negative effect of dissolved organic matter on the MDC performance. This study confirms the ability of MDC to concentrate RO brines. In principle, the industrial scale-up of the MDC process involving large volumes of brines do not show any technical complexity.

Martinetti et al. [31] studied vacuum-enhanced direct contact membrane distillation (VEDCMD) to increase water recovery during desalination of brackish water (Fig. 2). VEDCMD differs from VMD in its additional direct contact system, in which warmer feedwater is in contact with the active side of the membrane and a cooler water stream is in direct contact with the support side. In their tests, two RO brine streams were used as feed of the VEDCMD system, with total dissolved solid concentrations ranging between 7500 and 17,500 mg/L. A recovery factor up to 81% was achieved. However, recovery factors were always limited by the precipitation of inorganic salts on the membrane surface. Martinetti et al. [31] showed also that cleaning techniques were able to remove the scaling layer from the membrane surfaced restoring the water permeate flux to almost its initial level. The authors also claimed that the addition of scale inhibitors during the process was effective in maintaining high water permeate flux during an extended VEDCMD operating time.

MD commercialization looks promising and several companies have shown interest. In June 2012, GE Water and Memsys Clearwater Pte Ltd agreed to jointly develop a multi-effect vapor compression (VC) MD system that successfully concentrated water from shale gas operations at a commercial disposal well site in Texas [32]. Another MD unit equipped with 40 m^2 of membrane area was built and successfully concentrated about 50 m^3/day of feedwater with a TDS averaging 150 g/L up to approximately 230 g/L with no noticeable decline in performance during a 200-hour test. The companies claimed that no cleaning was required and the energy consumption was significantly lower than conventional evaporation technologies. For larger commercial oilfields, the system is capable of concentrating up to 100–150 m^3/day of brine. With this experience, GE expects to introduce systems for commercial operation late in 2014. Dutch Aquastill commercialize direct contact membrane distillation (DCMD) based on Memstill technology.

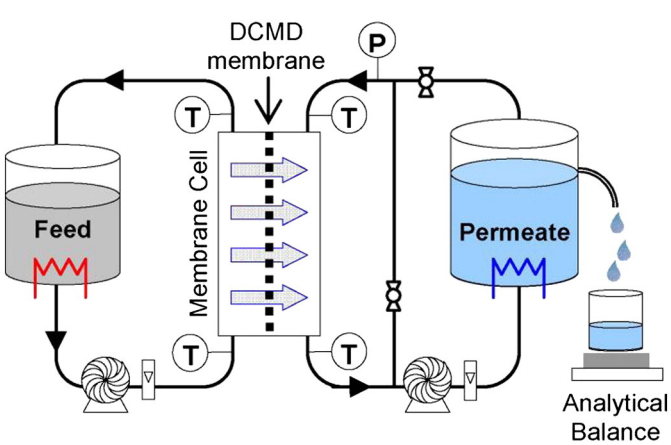

Fig. 2. Schematic drawing of vacuum-enhanced direct contact membrane distillation (VEDCMD) system [31].

Guillén-Burrieza et al. [33] studied air gap membrane distillation (AGMD), in which the permeated vapor migrates across an air gap before condensing on a cold surface nearby. Condensed permeate falls under gravity as product water. The authors fed the system with NaCl solutions of 1 and 35 g/L at temperatures up to 85 °C in the feed and up to 75 °C in the refrigeration. A static solar-collector field provided the necessary heat for the process. Maximum specific distillate flux values recorded were in the range of 7 L/(m^2·h) in 3 modules with a membrane surface area of 2.8 m^2 each. These modules are commercially available and have been developed and manufactured by the Swedish company Scarab AB.

MD is commercially available and produces very high-quality distillate; salt rejections of 99–100% are achievable in most circumstances. Furthermore, the feedwater does not require the extensive pretreatment that is typically vital for pressure-based membrane processes, which makes it technically feasible for treating large amounts of water in seawater desalination plants. However, MD could have problems related to scaling on membranes. Energy requirements are high relative to energy use of RO, but less than traditional evaporation and crystallization systems. In addition, water can be distilled at relatively low temperatures (i.e., 5 to 80 °C). As the driving force for MD is temperature difference, very low feed temperatures can produce reasonably high rates of product water and may be more practical considering the nature of some water impurities (e.g. scaling issues at high temperature) [34]. Low feed temperatures also allow the use of low-grade heat such as industrial waste heat, solar or desalination waste heat, so that MD can be easily coupled with solar ponds.

A salt-gradient solar pond is a body of saline water in which the salt concentration increases with depth, from a very low value at the surface to near saturation at the bottom. The density gradient inhibits free convection, and the result is that solar radiation is trapped in the lower region [35]. Lu et al. [36] provided heat to MD systems with a coupled salt-gradient solar pond. The MD unit was successfully operated at a first-stage vapor temperature range of 60–75 °C, and at a very high concentration ratio with the reject brine near saturation. The temperature level has a significant effect on both production rate and performance ratio. The production rate increases, but the performance ratio decreases with both increased temperature and increased temperature differences between the first and fourth stages. The membrane distillation unit produces high-quality distillate of about 2–3 mg TDS/L. Quiblawey et al. [37] did an overview of solar thermal desalination technologies focusing on those technologies appropriate for use in remote villages and concluded that solar energy coupled with desalination offers a promising prospect for covering the fundamental needs of power and water in remote regions, where connection to the public power grid is either not cost-effective or not feasible, and where water scarcity is severe.

2.5. Two-stage reverse osmosis

2.5.1. Seawater

Two-stage RO is an alternative that has been used for years and enables increased water production and reduced concentrate quantity [38]. In this technology, the concentrate, at first-stage RO working pressure, is pressurized before entering to the second stage RO modules [39]. The first commercial plant capable of treating 4500 m^3/day was built in the Canary Islands in 1999. Since then, many commercial plants have been installed worldwide. These installations increase the water recovery of the process but are far from achieving zero liquid discharge. Fig. 3 shows a typical diagram of a two-stage RO process for seawater.

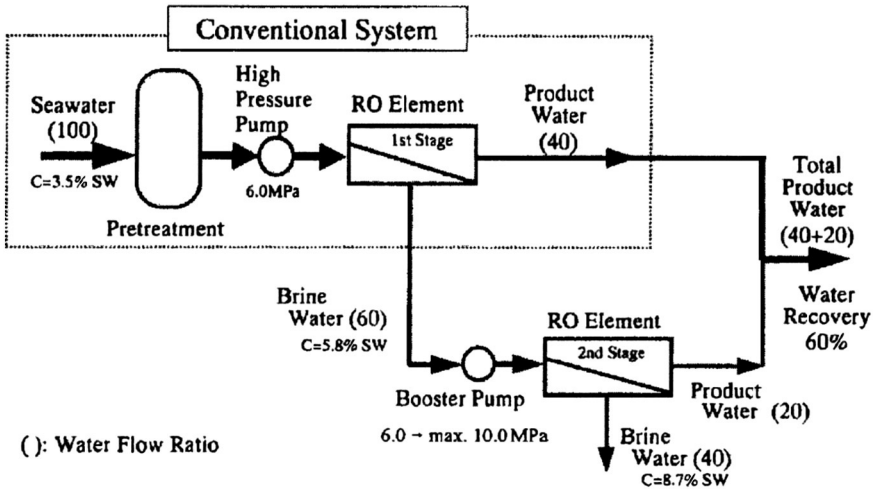

Fig. 3. Typical flow diagram of brine conversion two-stage RO seawater desalination system [38].

This technology has been significantly developed by continuous improvements in membranes used in RO. Toray industries (Japan) developed a RO seawater desalination system which provides up to 60% recovery of fresh water compared to 40% in single-stage RO [40]. The process is based on the energy recovered from the first-stage brine, which is used to pump the feed to the second stage. For this purpose, a 210 m^3/day pilot RO plant at Ehime, Japan, was rebuilt to operate with the two-stage brine conversion process to test this technology (Fig. 4). Results and standard operating conditions are shown in Table 1.

The most important factors affecting the RO membrane process are membrane fouling and/or scaling, resulting in higher operating cost. Membrane fouling/scaling causes a permeate flux decrease during constant operating conditions. Fouling on the membrane surface is mainly caused by natural organic matter (NOM), colloids and biofilms from bacterial growth (biofouling). Additionally, scaling formed by the precipitation of salts on the membrane surface is often caused by $CaCO_3$, $CaSO_4$, silica (SiO_2) and iron hydroxide ($Fe(OH)_3$) in the seawater RO process. Chemicals are used for preventing limitations in performance due to fouling/scaling in RO membranes. Nevertheless, in some cases this treatment is insufficient in two-stage RO plants. Thus, many authors suggest additional treatment. Osmotic pressure in the second stage feed requires a high pump pressure and thus high energy consumption [41,42]. An energy recovery turbine can recover second-stage RO reject pressure energy and diminish energy costs [43]. According to Gilau et al. [43], the energy recovery turbine results in a reduction of about 41% in the produced water cost, compared to previous second stages RO studies. Furthermore, the authors claimed that using an efficient booster pump and appropriate membranes with energy recovery turbine, specific energy consumption was about 2.33 kWh/m^3, reducing the specific energy consumption by about 70% compared to less efficient design without these three features. Kurihara et al. [39] reveal that the cost of producing water can be reduced with approximately 15–20% and the size of the plant with about 30% as pretreatment process is not needed.

2.5.2. Brackish water

Ning et al. [41] proposed a tandem RO process with interstage treatment aiming at increasing recovery and avoiding precipitation. Substances susceptible to precipitation were removed by chemical treatment. In the case of calcium and magnesium, lime ($Ca(OH)_2$) and sodium carbonate (Na_2CO_3) were used to provoke precipitation. Later in the process, a liquid–solid separation took place before the second RO.

Greenlee et al. [44,45] tested the addition of antiscalants to the RO feed and concluded that they prevent precipitation within the membrane system but have a deleterious effect on a subsequent concentrate precipitation process to remove problematic species. They also investigated a three-step process to treat brackish water RO concentrate; the steps included oxidation of antiscalants with ozone (O_3) and hydrogen peroxide (H_2O_2), precipitation at elevated pH, and solid/liquid separation (Fig. 5). A model water concentrate was used to perform laboratory scale experiments. Results indicated that the concentrate treatment could increase overall recovery from 80% to 90% for non-ozonated, antiscalant-dosed concentrate and from 80% to 94% for ozonated, antiscalant-dosed concentrate. An increase in recovery from 90% to 94% could also be achieved through a higher carbonate/base dosage and an increase in pH. However, operating the precipitation step at higher pH would cause more precipitation of magnesium hydroxide ($Mg(OH)_2$), which is a difficult substance to filter. The ozonation step influenced not only the amount of calcium and other ions that precipitated, but also the particle size distribution, particle morphology, and filtration performance.

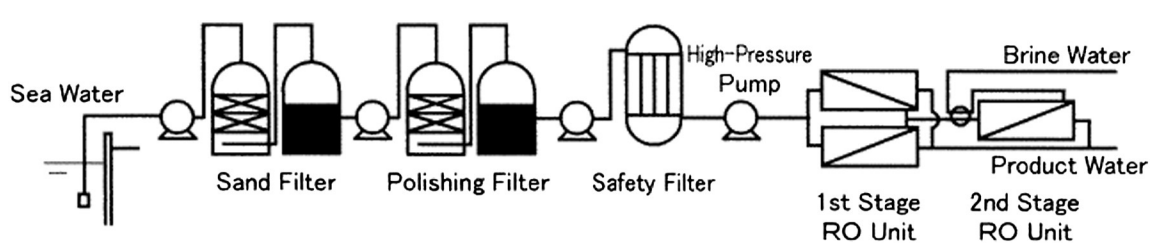

Fig. 4. Flow diagram of the pilot plant developed by Toray industries in Ehime factory, Japan [40].

Table 1
Standard operating conditions of RO plant in Ehime Factory, Japan [40].

		First stage	Second stage	Units
Seawater feed	Flow rate	350	210	m^3/day
	TDS	35,000	58,000	mg/L
Permeate	Flow rate	140	70	m^3/day
	TDS	100	250	mg/L
Operation conditions	Pressure	65	88	bar
	Recovery ratio	40	33	%
	Membrane module	SU-820 × 6	SU-820BCM × 6	–
	Number of modules	2	1	–

Gabelich et al. [13] evaluated intermediate chemical demineralization (ICD) with a solid contact reactor (SCR) followed by a filtration step (Fig. 6). The process led to improved water recovery at a Colorado River desalination plant, from 85% (i.e., in the primary RO unit) to 95% via a secondary RO unit. Process analysis showed calcium and total carbonate concentrations as the key operating variables controlling ICD performance. Analysis of process data also revealed that removal of both barium and strontium is strongly correlated with calcium removal. Rahardianto et al. [46] studied a process called chemically-enhanced seeded precipitation (CESP) between two stages of RO, in which $CaCO_3$ precipitation is first induced via $Ca(OH)_2$ dosing, followed by subsequent $CaSO_4$ precipitation via gypsum seeding (Fig. 7). The authors used seeded crystals to overcome low performance due to antiscalant, as was suggested by Greenlee et al. [44,45], and they also demonstrated that lime-precipitated $CaCO_3$ particles were able to scavenge generic and commercial polycarboxylic-acid antiscalants, thereby facilitating subsequent $CaSO_4$ precipitation to progress with minimal retardation.

Bond and Veerapaneni [47] evaluated different options for intermediate treatment, including chemical precipitation with sodium hydroxide (NaOH) or $Ca(OH)_2$, alumina (Al_2O_3) adsorption, precipitation with aluminum sulfate ($Al_2(SO_4)_3$) and fluidized bed crystallization, when bigger crystals are required. As a final step, they proposed a brine concentrator and evaporation ponds. In addition, a cost comparison was performed to compare treatment with and without the intermediate step (fluidized bed crystallization and microfiltration). The authors concluded that the intermediate step can reduce costs between 50 and 70% and energy consumption between 60 and 75%. Mohammadesmaeili et al. [48] studied a process with an intermediate softening step using $Ca(OH)_2$ and Na_2CO_3, various evaporation and crystallization stages before a second RO, and a final evaporation stage.

Mukhopadhyay [49] patented a high-efficiency RO process (HERO™) to enhance RO water production. This technology was developed to produce ultrapure water for the electronics industry, but many authors have recently studied its applicability to two-stage RO. This process consists of three steps. The first step is to adjust the hardness-to-alkalinity ratio of the feedwater, which is typically done by alkali addition. The second step involves the use of a weak acid cation (WAC) exchange resin. The WAC resin removes hardness quantitatively, given the proper hardness-to-alkalinity ratio of the influent. The third stage is degasification for carbon dioxide elimination followed by increasing pH up to 10.5 or higher adding NaOH (Fig. 8). These steps allow higher recovery in the second RO. In this manner, species such as SiO_2 become highly ionized and (a) their rejection by the membrane separation process is significantly increased, and (b) their solubility in the reject stream from the membrane process is significantly increased. Passage of weakly ionized species such as boron, SiO_2 or TOC is reduced by a factor of ten or more. A recovery ratio of 90% or higher is achievable with most brackish feed waters, while simultaneously achieving a substantial reduction in cleaning frequency. Rahardianto et al. [50] used the HERO™ process for achieving high product water recovery (>95%) for desalting brackish water from the Colorado River. The feedwater had 950 mg TDS/L, mainly sodium but also SiO_2, boron, calcium, barium, magnesium and bicarbonate in small amounts. The results demonstrated that the HERO™ process can achieve 95% to 98% recovery ratios with estimated energy requirements from 11 to 19 kWh/m^3.

In the case of high-calcium brackish waters, Sanciolo et al. [51] studied the feasibility of removing calcium scale precursor ions from inland municipal wastewater RO concentrate by accelerated seeded precipitation (ASP). Three seed materials were tested in laboratory trials: $CaCO_3$, $CaSO_4$ and calcium phosphate ($Ca_3(PO_4)_2$). While $CaCO_3$ and $CaSO_4$ seed were not effective, $Ca_3(PO_4)_2$ seed particles and phosphate ions in stoichiometric excess over the calcium concentration decreased the calcium content in the RO concentrate successfully. Preliminary cost analyses indicated that high-recovery RO using $Ca_3(PO_4)_2$ precipitation can only be justified in inland situations where restrictions on concentrate disposal drive smaller evaporation pond storage volumes to offset the higher chemical and energy costs.

The installation of a second stage of RO is a breakthrough that has brought about significant improvements in desalination plants. One of its main advantages is that RO is a well-established process compared to many other processes that are not available at a commercial scale. Furthermore, this technology allows minimizing brine disposal and relating costs, especially in inland plants. It is important to highlight here that for inland desalination plants, concentrate management is a major concern because of the cost of the available technologies and because of environmental regulations. However, second stage RO performance is limited by salinity and scaling. Salinity requires higher pressure and energy consumption compared to first stage to allow water recovery [41,42]. Scaling needs chemical reagents to precipitate salts. Further research is needed to find more efficient energy recovery systems, economical chemical treatments, selective RO membranes with good permeability and methods to offset part of the installation price by obtaining valuable salts.

2.6. Closed circuit desalination

Closed circuit desalination (CCD), based on recirculating concentrate to the same RO membrane in a batch-like operation, is an emerging platform for RO water treatment. Stover [52] did a study on CCD fed

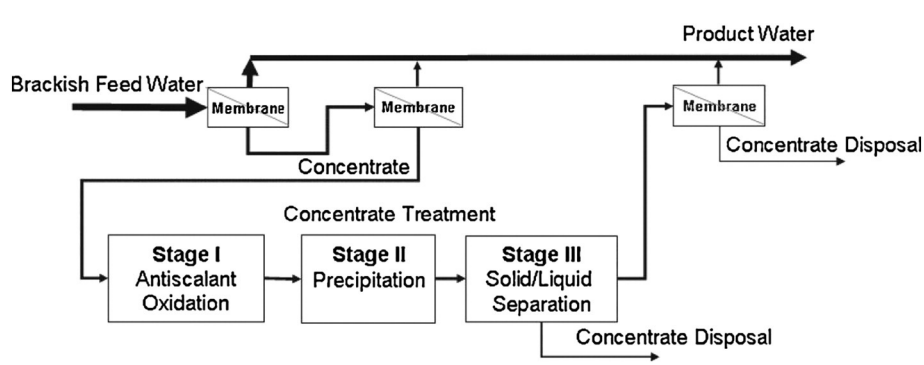

Fig. 5. Flow diagram of treatment proposed by Greenlee et al. [45].

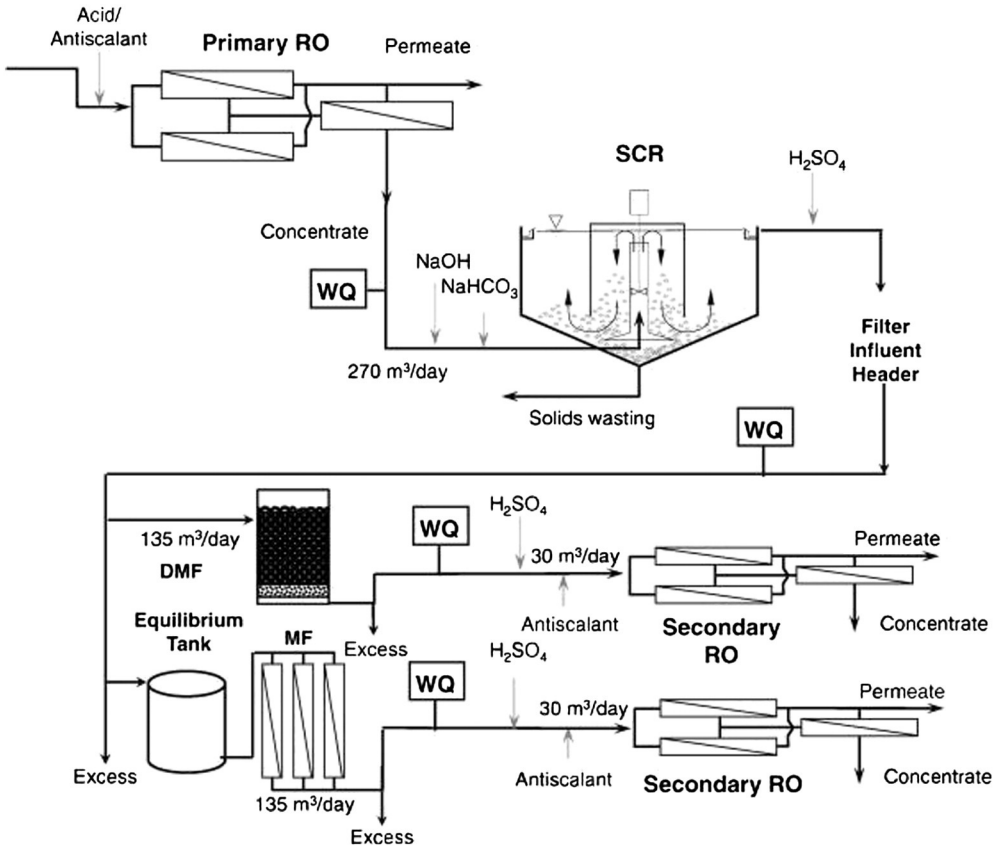

Fig. 6. Schematic of brackish water treatment proposed by Gabelich et al. [13] (DMF: dual-media filtration; MF: microfiltration; SCR: solid contact reactor; WQ: water quality).

with brackish water and achieved over 97% recovery with an energy consumption of 0.77 kWh/m^3, limited only by scaling. The authors compared CCD to conventional three-stage desalination and concluded that CCD lowers the feed pressure requirement and energy consumption, improves membrane performance, increases operational flexibility and eliminates the need for energy recovery devices using only standard RO equipment. The authors claimed that CCD demonstrated resistance to fouling and scaling thanks to the crossflow provided by internal recirculation, necessary to sustain membrane performance during the desalination process. Qiu and Davies [53] compared conventional

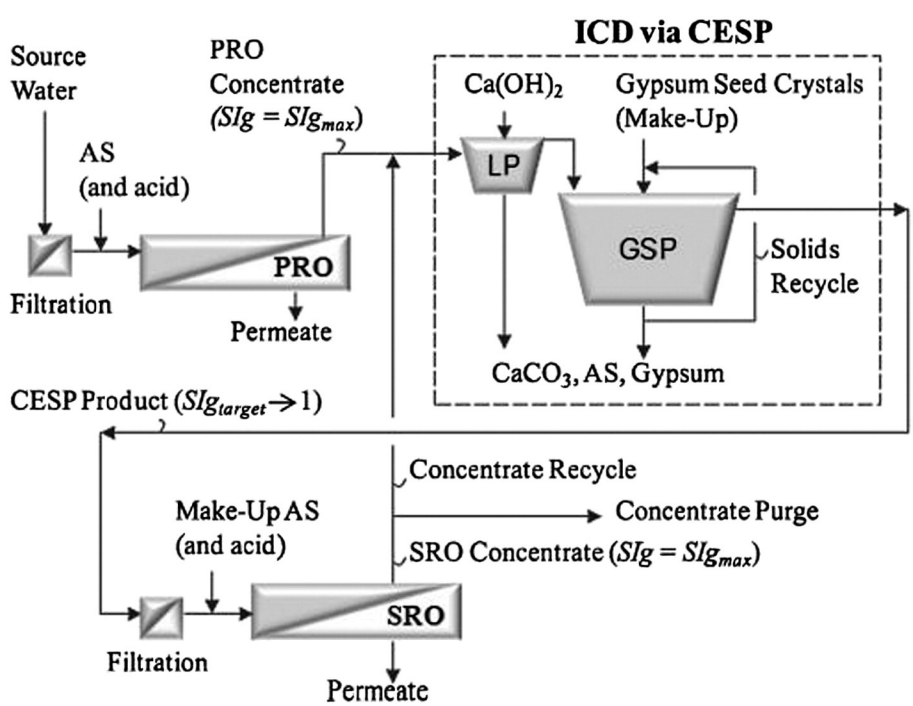

Fig. 7. Flow diagram of the brackish water process proposed by Rahardianto et al. [46] (AS: antiscalant; CESP: chemically-enhanced seeded precipitation; GSP: gypsum precipitator; ICD: intermediate chemical demineralization; LP: lime precipitator; PRO: primary RO; SIg: Gypsum saturation index; SRO: secondary RO).

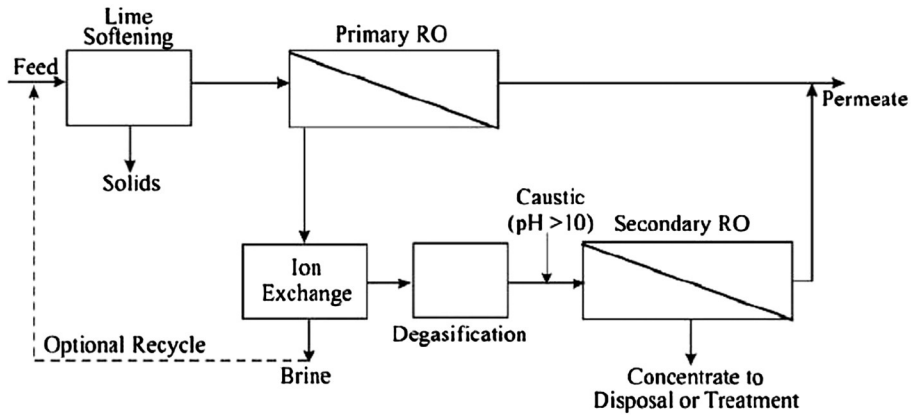

Fig. 8. Diagram of patented high-efficiency reverse osmosis process (HERO™) [49].

three-stage brackish water RO to a similar CCD system and concluded that CCD can reduce energy consumption up to 30% with a recovery ratio of 80%. The authors also claimed that by avoiding an energy recovery device and booster pumps, capital costs are also reduced. Efraty et al. [54] tested CCD fed with seawater and achieved 47.5% recovery in the energy range of 1.85–2.25 kWh/m^3. CCD uses RO, a state-of-the-art technology in water desalination, and achieves high recovery with reduced capital costs. However, this technology involves smaller permeate flow for the same membrane area due to recirculating, which makes this configuration optimal for applications where capital costs are crucial and flow is not critical.

2.7. Forward osmosis

The main difference between forward osmosis (FO) and RO is that in RO the applied pressure is the driving force for mass transport through the membrane. In FO the osmotic pressure itself is the driving force for mass transport [55]. Researchers over the past 40 years have proposed FO as a means of desalinating water and as a method for reducing the waste concentrate produced by desalination plants. The FO process has low pollution potential, low energy consumption, simplicity and reliability [56]. FO uses a highly concentrated solution generally referred to as draw solution to generate an osmotic pressure differential across the membrane, resulting in the transport of water from the less concentrated feed stream to the highly concentrated draw solution [57].

Tang and Ng [58] investigated FO and achieved 38.5% recovery using a feed stream similar to seawater RO concentrates (1–2 M NaCl, 58.5–117 g/L) and 5 M fructose as draw solution (900 g/L) in a laboratory-scale unit. Assuming a RO–FO process with 45% recovery for RO [3] and Tang & Ng's results for FO [58], the overall recovery rate range from 66 to 76%. Cath et al. [59] combined FO and RO on both bench and pilot scales to obtain fresh water from polluted water by using seawater as draw solution. The authors tested water flux, fouling propensity, solute transport and economic feasibility and concluded that the system was both economically and technically feasible over a broad range of operating conditions. Moreover, the cost of desalinated water can be substantially reduced with FO as pretreatment, making desalination a more attractive alternative for areas seeking to expand and diversify into non-conventional drinking water sources. Martinetti et al. [31] investigated FO for water recovery enhancement in desalination of brackish water (Fig. 9). In the referred study, two RO brine streams with TDS concentrations averaging 7.5 and 17.5 g/L were further desalinated by FO with a constant-concentration draw solution of 50 g/L NaCl. FO achieved water recoveries up to 90% from the brines, limited by salt precipitation on membranes.

FO energy requirements were lower compared to other desalination technologies. McGinnis et al. [60] pointed out that the FO process proposed by McCutcheon et al. [61,62] achieves an energy savings of 72% compared to RO and 85% compared to multi-stage flash distillation. The FO process becomes more and more economically feasible as energy prices increase because FO is an osmotically driven process instead of pressure-driven as RO.

FO is a simple technology that can highly concentrate brine with low energy requirements compared to other membrane technologies. In recent years, extensive research has been performed to develop FO at industrial scale. However, precipitation of salts on membranes diminishes permeate flow, and specifically designed membranes for the FO process and new draw solutions are necessary. FO membranes made of highly hydrophilic material and only a thin dense selective layer would raise water fluxes to a relatively high level. Solutes in the draw solution that are highly soluble in water, of low molecular weight, easily and economically separated and recycled, non-toxic and chemically compatible with the membrane being used would maximize the yield [57]. The future development of both an ideal FO membrane and a suitable draw solute will improve the performance of the FO process, making it a feasible technology for brine treatment.

2.8. Electrodialysis

Electrodialysis (ED) is an electro-separation process that uses electrical potential difference as a driving force to move ions through ion exchange membranes. Korngold et al. [63] applied ED to concentrated brine solutions similar to effluents from the desalination of brackish and industrial water. Results showed that ED can be used to increase the concentration of a brine solution from 0.2–2% to 12–20% with energy consumption in the range of 1–7 kWh/m^3, in contrast to approximately 25 kWh/m^3 by thermal evaporation. However, electrical

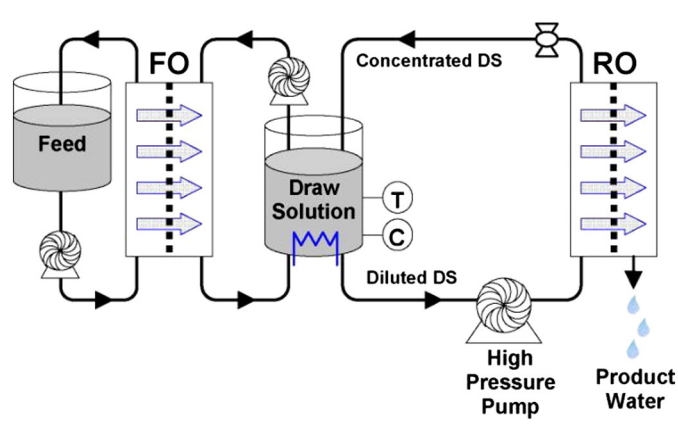

Fig. 9. Schematic drawing of FO system proposed by Martinetti et al. [31].

efficiency decreases when the brine concentration is significantly increased and $CaSO_4$ precipitates on the membranes. Nevertheless, precipitation on membranes can be avoided by pretreatment. Korngold et al. [64] built an ED pilot plant fed with brackish water in which brine circulating through the ED cells passed through a separate $CaSO_4$ precipitator containing gypsum seeds. ED proved to be usable for increasing the concentration of RO brine solution from 1.5 to 10% at an energy requirement of 7–8 kWh/m^3.

Oren et al. [65] tested a hybrid process combining RO and ED, which was shown to be effective in recovering 97–98% of brackish water as product water with chloride levels of 200 mg/L or less. The scaling potential of the concentrate was prevented by acidification and operating the ED unit in reversal mode, called electrodialysis reversal (EDR). This process was demonstrated in a series of more than eighty batch experiments of 1.5 to 1.8 m^3 of RO concentrate of raw brackish groundwater from the Negev Highland in Israel. The feedwater was concentrated from 0.3 to over 10% TDS superconcentrate while producing water that could be mixed with the RO permeate. This superconcentrate from the EDR unit was further concentrated in a wind-powered WAIV unit that brought final brine TDS to over 30%. Initial economic estimates showed that this hybrid process is competitive with conventional RO and other enhanced recovery processes for inland desalination requiring use of evaporation ponds.

General Electric (GE) has developed EDR technology to industrial scale. One of the GE EDR water treatment systems currently provides drinking water for nearly 20% of Barcelona's metropolitan region in Aigues Ter-Llobregat's (ATLL) water treatment plant in Abrera, Barcelona, Spain. The production capacity of the plant is 220,000 m^3/day and operates at 90% water recovery [66]. GE has also used EDR to further concentrate the RO reject stream in a process called AquaSel. GE Water has announced that AquaSel was successfully operated at an Asian Coca-Cola bottling plant in December 2011. The 136 m^3/day system was in operation for over 1000 h and recovered more than 99% of the RO concentrate from an ingredient-quality water treatment system used for the manufacture of soft drinks [67].

ED is a process developed at industrial scale and capable of concentrating brine effectively using only electricity as an energy source. In this way energy can be supplied by photovoltaic panels, which makes this technology especially suitable for places with high insolation. However, ED performs worse than other technologies when the brine becomes highly concentrated due to scaling on the membranes and lower yield of electric fields. Further research is needed to improve permeability and selectivity of membranes and to find new ways to avoid scaling, such as chemical reagents.

3. Technologies for commercial salt recovery

3.1. SAL-PROC process

SAL-PROC is an integrated process for sequential extraction of dissolved elements from inorganic saline waters in the form of valuable chemical products in crystalline, slurry and liquid forms. An analysis indicated that various types of salts, including gypsum, NaCl, $Mg(OH)_2$, calcium chloride ($CaCl_2$), $CaCO_3$ and sodium sulfate (Na_2SO_4), can be produced from the reject brine of desalination plants. The SAL-PROC system has undergone a sustained period of development and improvements including field trials, piloting, and public demonstrations, testing TDS concentrations ranging from 7.5 to 82 g/L [68]. SAL-PROC systems have been evaluated for various installations with treatment capacities between 822 and 7991 m^3/day [68]. Fig. 10 shows a simplified diagram of the process. From an economic point of view, it was estimated that by processing 405,000 m^3/y of reject brine, commercial salts worth $895,000 could be produced [69]. Although the economic benefit will probably be lower, the commercialization potential of salts is an option to improve profitability of desalination processes.

Arakel et al. [70] used SAL-PROC to process brackish water from Tutchewop Lake (Victoria, Australia). This lake receives a discharge of approximately 64,000 t/y of salt. The process made it possible to recover high quality $Mg(OH)_2$, NaCl, a mixture of gypsum and $Mg(OH)_2$ and a highly concentrated solution of $CaCl_2$. The SAL-PROC route used in this case is described in detail in Fig. 11.

Arakel et al. [70] combined RO and SAL-PROC in a process known as ROSP. This process was used for treating brackish RO brine with a high bicarbonate concentration in the effluent coming from coal-based methane extraction (CBM extraction) in Queensland, Australia (Fig. 12). The ROSP process produces $CaCO_3$, Na_2SO_4 and NaCl.

The SAL-PROC process is designed to achieve zero liquid discharge of concentrated saline brines and its theoretical recovery is 100%. Infrastructure requirements for SAL-PROC systems may be relatively high and will likely require a significant footprint to accommodate chemical reagent storage and product salt storage. However, the SAL-PROC system is relatively mobile and can be constructed to operate out of a cargo trailer [68]. This proprietary process requires only simple technology based on chemical precipitation reactions to produce salts; nevertheless the exact nature of these reagents has not been reported, with the exception of $Ca(OH)_2$ [68]. Studies show that this process is particularly recommended for brackish inland brines thanks to high water recovery, which eliminates disposal costs. The SAL-PROC system is also recommended for brines with high concentrations of sulfate, potassium

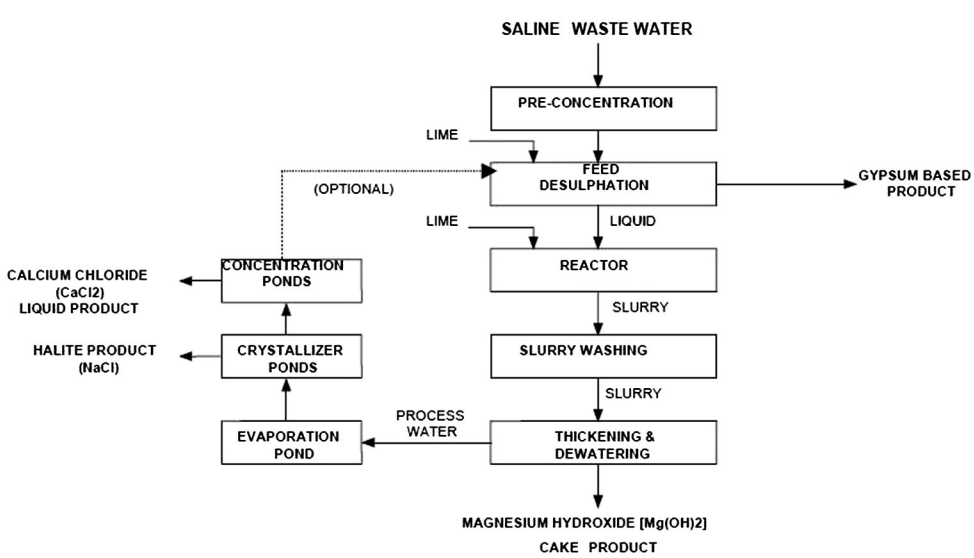

Fig. 10. Simplified diagram of SAL-PROC process [69].

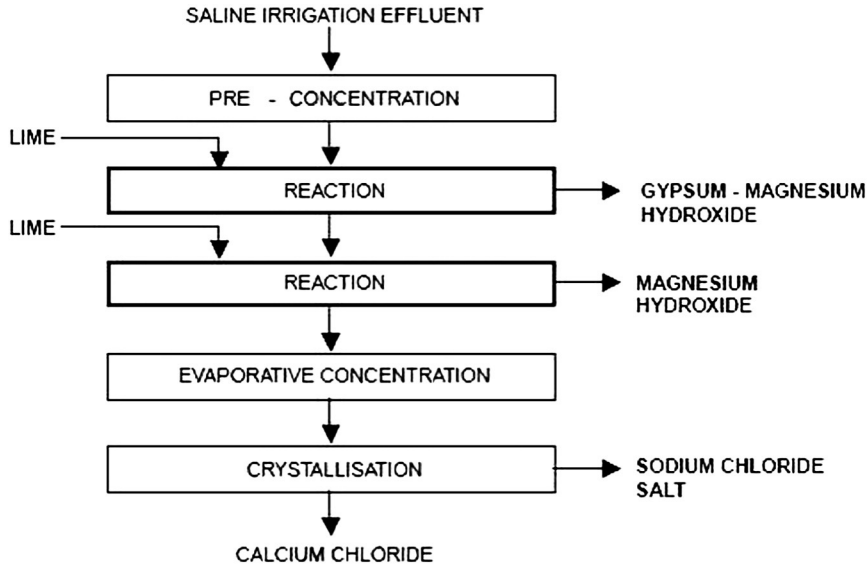

Fig. 11. SAL-PROC process used in the treatment of brackish water from Tutchewop Lake [70].

and magnesium because they improve valuable salt production and can cover costs. Further research is appropriate to obtain new products with a higher value and to improve the quantities of chemical reagents required.

3.2. Zero discharge desalination

The University of South Carolina [71] developed a technology called zero discharge desalination (ZDD) for the treatment of seawater RO brines (Patent PCT/US03/24250). The process focuses on producing fresh water and valuable salts: NaCl, $Mg(OH)_2$ and bromine (Br_2). The process has different configurations, all based on ED. In the basic configuration (Fig. 13) NaCl is recovered as a dry salt and the waste streams of $Mg(OH)_2$ and Br_2 are returned to the sea. In the second configuration, pure NaCl is recovered by adding a crystallizer, and the waste streams that return to sea in the first case are treated by evaporation for drying and production of road salt (Fig. 14).

Experiments carried out at laboratory scale showed that about 75% of NaCl in the brine was recovered as high-purity NaCl crystals in the evaporation–crystallization stage. Because of ED concentrates NaCl up to 20%, NaCl can be crystallized with only one-third of the thermal energy that would be required if the total amount of water in the RO reject were to be evaporated.

These experiments pointed out that $Mg(OH)_2$ production of greater than 99% purity was achieved by pretreatment with Na_2CO_3 to remove calcium. However, using Na_2CO_3 also precipitates magnesium and affects process yield. Br_2 production was estimated by a mathematical model developed for this purpose. Simulations showed that about 0.38 tons of bromine ion would be recovered in the ED brine associated with 3.79 million m^3 of seawater RO permeate, and essentially all of that could be recovered as Br_2 by conventional techniques.

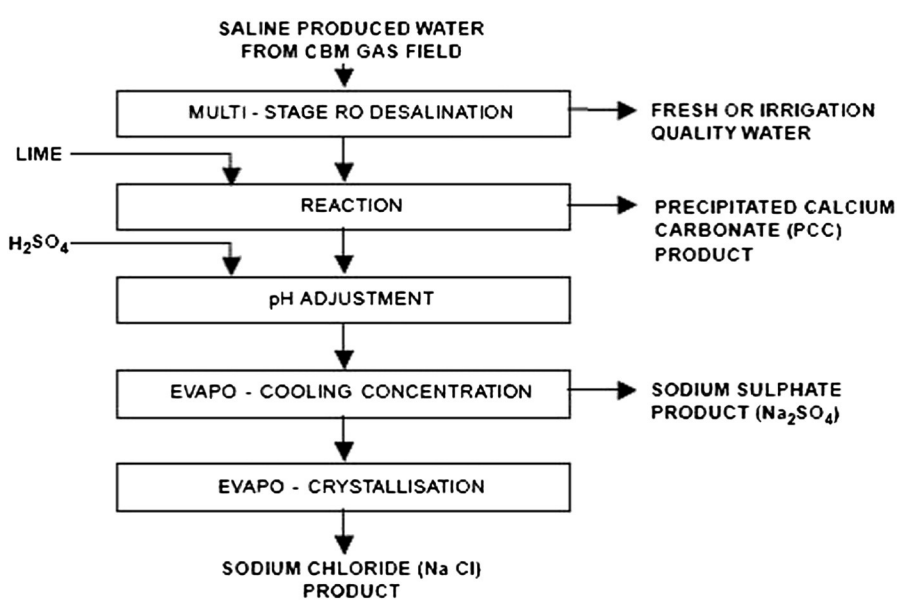

Fig. 12. ROSP process for treatment of water coming from coal-based methane extraction (CBM) gas field [70].

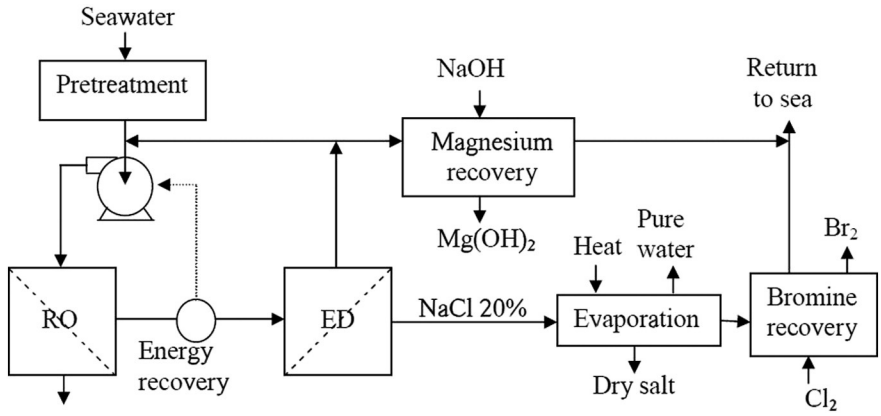

Fig. 13. Process schematic for zero discharge desalination with optional seawater discharge [71].

The University of South Carolina [72] patented another ZDD process (Patent PCT/US2005/032419), which was licensed to Veolia for international commercialization. This process uses an electroseparation technology referred to as electrodialysis metathesis (EDM) followed by a crystallizer and a precipitator to treat brackish water RO brine. The concentrated salts rejected by the RO are fed to the EDM process, which is utilized to further concentrate the salts into two concentrate streams: one rich in calcium chloride and the other in sodium sulfate. Blowdown of the two concentrate streams may be mixed together to precipitate calcium sulfate, or gypsum. The diluate of the EDM can be returned to the RO feed (Fig. 15).

The primary difference between EDM and unidirectional electrodialysis is the use of five solution compartments (including the electrolyte circuit) and four membranes, rather than two of each in the repeating unit. The repeating unit comprises one diluate compartment, two concentrate compartments, one NaCl solution compartment, one ordinary anion exchange (A), one ordinary cation exchange (C), one monovalent selective anion exchange (SA) and one monovalent selective cation (SA) [73].

Coupled to RO, both ZDD configurations can achieve up to 99% water recovery rate [71,72]. Furthermore, ZDD can result in zero brine discharge, which reduces disposal costs, especially in inland plants and scale-up could be easily achieved because all the separation processes involved are available on a commercial scale. In addition, ZDD processes allows the recovery of valuable salts such as NaCl, $Mg(OH)_2$ and Br_2 in the case of ZDD based on ED, and Na_2SO_4 and $CaSO_4$ in the case of ZDD based on EDM. The University of South Carolina's estimates indicate that ZDD is economically feasible thanks to commercial salts recovery. However, ZDD capital costs are high due to the multiple techniques required: ED(M), brine concentrators, crystallizers and brine purification treatments.

3.3. Integrated processes

Turek [74] investigated seawater desalination in an ED-Multi-stage Flash (MSF)-Crystallization system (Fig. 16) in which the ED system (ED followed by EDR in countercurrent flow mode) concentrated seawater to 100 g TDS/L and MSF raised the concentration to 300 g TDS/L.

The water recovery of the ED system (Fig. 17) was 66.4% (73.8% for ED and 90% for the EDR stage). In the first step, monovalent ions were removed by monovalent ion exchange membranes (ACS and CMS membranes, Tokuyama Co.) producing a permeate with a TDS concentration around 10 g/L (0.38 g/L calcium, 1.26 g/L magnesium, 4.08 g/L chloride and 2.78 g/L sulfate). EDR unit, using Asahi Glass membranes, eliminated most of the ions, achieving a permeate with low salinity. A single-pass low residence time mode of operation was applied to avoid gypsum crystallization in the EDR concentrate that resulted in no gypsum crystallization in the EDR concentrate despite its concentration was above saturation.

This investigation included a cost estimate of ED/EDR application for seawater desalination. The cost was calculated for an industrial ED unit with 80% effective membrane surface. The energy cost was assumed as \$0.06/kWh, the efficiency of pumps as 0.85 and the membranes' life as 10 years. It was assumed that the MSF unit cost was equal to \$1.0/m^3. The costs of further evaporation accompanied by salt crystallization were estimated based on the study of the construction of the plant and were assumed to be \$8/t of salt obtained. The value of salt obtained was \$30/t while the salt recovery was

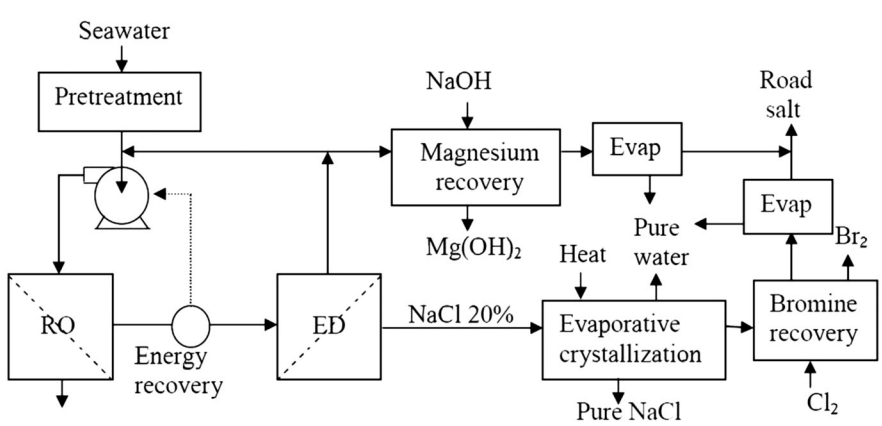

Fig. 14. Process schematic for zero discharge desalination based on electrodialysis [71].

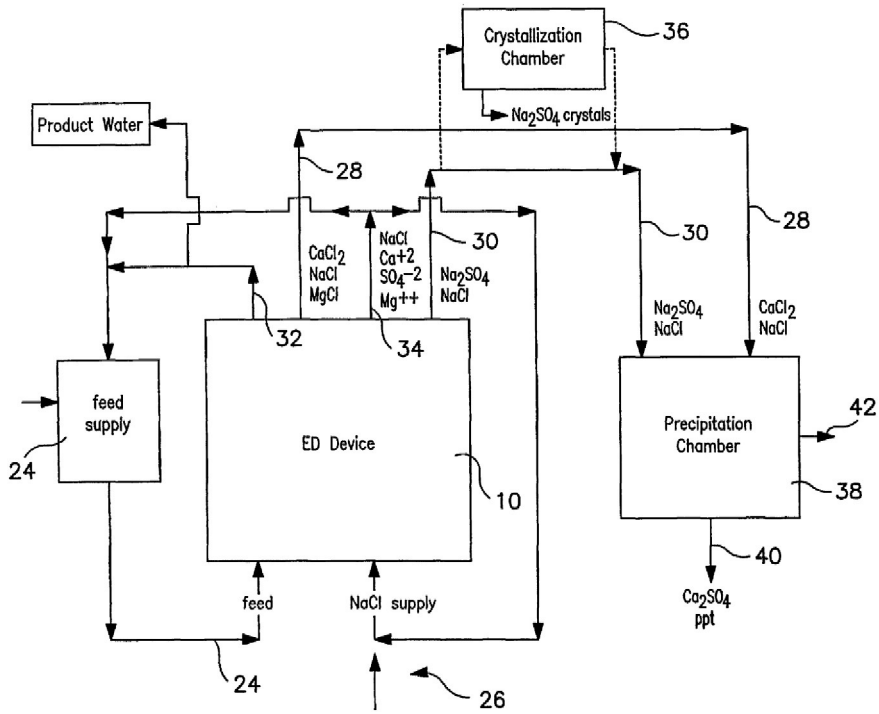

Fig. 15. Process schematic for zero discharge desalination based on electrodialysis metathesis [72].

80%. The authors pointed out that with this process the produced water cost is estimated to be only \$0.44/m^3 and salt production is 23.7 kg/m^3 of produced water.

Turek [75] also investigated two arrangements fed with seawater for producing salt and fresh water: ultrafiltration (UF)–nanofiltration (NF)–MSF–crystallization (Fig. 18) and UF–NF–RO–MSF-crystallization (Fig. 19). Nanofiltration is a pressure-driven process between RO and ultrafiltration. Its main advantages are lower working pressure and greater rejection as divalent cations than monovalents. In all the above systems, both UF and NF were applied as pretreatment and in order to achieve a considerable decrease in scale-forming ions. Higher recovery may then be reached when desalting in comparison to traditionally treated water since scaling is reduced and the osmotic pressure of NF permeate is diminished. These characteristics suggest that this process is interesting for treating water with a high concentration of divalent ions. Seawater was assumed to be the input and NF recovery of 70% was obtained. Furthermore, the rejection coefficient of the NF membrane was assumed to be 0.83 for calcium, 0.87 for magnesium, 0.93 for sulfate and 0.1 for NaCl. The NaCl concentration in NF permeate is 28.70 g/L. The cost estimation for 1 m^3 of UF permeate is presented in Table 2. A value as low as \$0.18/m^3 in the NF process was assumed because the pretreatment cost was considered separately as UF cost. The costs of further evaporation accompanied by salt crystallization were estimated based on the study of the construction of the plant and were assumed to be \$8/t of salt obtained. The value of salt obtained was \$30/t and the cost of desalinated water was \$0.71/m^3. Since concentrating by RO is cheaper than by MSF in the range of relatively low salt concentrations, then pre-concentrating by RO may be assumed to decrease the cost of the desalination–salt production process. The cost estimate for this process is presented in Table 3. It was assumed that RO recovery was 65% while its cost was \$0.63/m^3 and the value of salt obtained was also \$30/t. The cost of desalinated water was then \$0.43/m^3.

The processes proposed by Turek [74,75] are especially indicated for areas with seawater availability and lack of freshwater resources, fossil fuels and land. In fact, ED is applied commercially in Japan for concentrating seawater to TDS 200 g/L followed by thermal concentration and salt crystallization.

Drioli et al. [76] developed an integrated membrane system in order to recover $CaCO_3$, NaCl and magnesium sulfate heptahydrate ($MgSO_4 \cdot 7H_2O$) from seawater nanofiltration retentate (Fig. 20). In this work, nanofiltration retentate calcium ions were precipitated as carbonates by reaction with sodium bicarbonate ($NaHCO_3$) and Na_2CO_3 solutions. These solutions were previously produced by reactive transfer of CO_2 into NaOH solutions in a hollow fiber membrane contactor with 1.4 m^2 of contact area. The alkaline solution was fed in continuous mode on the shell side in countercurrent to the gaseous CO_2 stream flowing through the fibers. The amount of CO_2 transferred from the gas phase to the liquid phase was calculated using the mass balance of the gas stream. The flow diagram was completed with a crystallization system based on a membrane process that allows supersaturation. In all tests, the solution was fed into the crystallizer and recirculated through the membrane fibers with a flow rate of 120 L/h. Temperatures measured at the module inlet on retentate and distillate sides were 15 and 35 °C, respectively. The pH

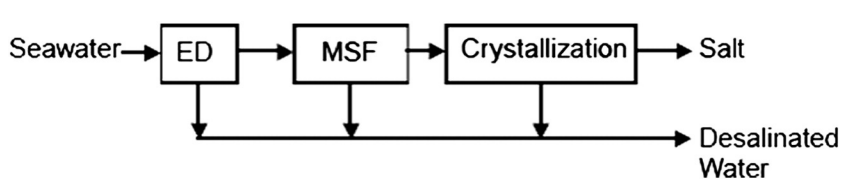

Fig. 16. Schematic of desalination in ED–MSF–crystallization system [74].

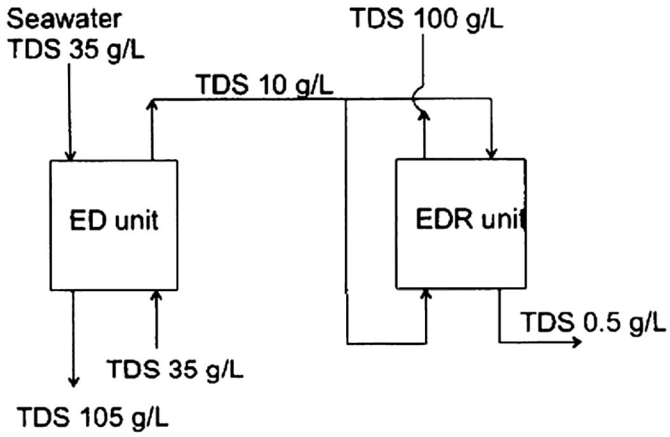

Fig. 17. Schematic of seawater desalination by electrodialysis in ED–MSF–crystallization system [74].

of the crystallizing solution was adjusted to 5 by hydrochloric acid (HCl) addition in order to avoid $Mg(OH)_2$ precipitation, favoring the formation of magnesium sulfate crystals.

An efficient CO_2 mass transfer into alkaline solution was obtained at high pH values. Experimental results showed that variations in gas flow rate did not affect the amount of transferred CO_2; moreover, the main resistance to CO_2 diffusion is in the liquid phase. By operating at pH 11.86, CO_3^{2-} amounted to 97.3% of all carbonate species present in solution. The total reduction of calcium ions varied from 56 to 89% for initial pH values of 9.05 and 9.90. It was experimentally verified that if the retentate stream is processed entirely, it is possible to increase the fresh water recovery factor of the nanofiltration unit up to 95%, to recover 78% of dissolved NaCl, and to produce 8.4 kg $MgSO_4 \cdot 7H_2O/m^3$ of NF retentate.

Integrated processes have high water recovery and the yield is independent of climate conditions unlike evaporation ponds. Moreover, the processes involved are developed at industrial scale. However, integrated processes are complex and costs are high compared to other options due to the capital cost of purchasing the material necessary for every treatment and the operating costs. As a result of different treatments, the processes are energy intensive and require energy in the form of heat and electricity, which complicates the use of renewable energy sources. Nevertheless, salt production contributes to offsetting the costs.

4. Brine adaptation for industrial use

4.1. Brine adaptation for chlor-alkali industry

Electrolytic cells currently used for Cl_2 and NaOH production require feed brines near NaCl saturation (300 g/L). Furthermore, brine must be free of organic matter, calcium, magnesium, barium and strontium. Melián-Martel et al. [77] proposed a system to adequate seawater RO brine for the chlor-alkali process based on brine concentration with a multi-effect evaporator and removing calcium, sulfates and magnesium with chemical precipitation. This process was tested with 8400 m^3/day of concentrated brine coming from Pozo Izquierdo desalination plant, Gran Canaria, with a production capacity of 33,000 m^3/day and a conversion of 50%. The treated brine was used to feed an electrolyzer to assess Cl_2 and NaOH production. The proposed system achieved a production of 101.16 kt/y Cl_2, 253.71 kt/y NaOH and 2.82 kt/y hydrogen gas (H_2). Compositions of the products are shown in Table 4.

Brine adaptation for the chlor-alkali industry is a technology available for offsetting the cost by selling the concentrated brine to another industry. From an energy point of view, producing the brine for the chlor-alkali industry starting from a RO concentrate requires less energy to concentrate NaCl than starting from seawater. Melián-Martel et al. [77] estimated consumption of about 2150 kWh/t NaOH. Furthermore, the H_2 obtained could be used in situ for generating electricity so that some of this consumption could be self-supplied, which makes this process appropriate for places where energy costs are especially high. Adaptation for the chlor-alkali industry reduces the amount of land required and contributes to reducing capital costs, especially where land is expensive or even not available. However, divalent cations are also more concentrated in the RO brine and require removal, which involves high costs. This problem has been overcome by producing NaCl and then generating the necessary brine. Tanaka et al. [78] found that the energy consumption in a salt manufacturing process using ED with seawater RO brine was 20% less than the energy consumption if using seawater. It has been the focus for companies like Tokuyama Co. and Al-Kout Industrial Projects, which have built industrial plants to concentrate seawater with ED in Japan, Kuwait and South Korea [79]. Further research is necessary, especially related to the creation of chlor-alkali plants annexed to desalination facilities as suggested by the authors. These new plants would give an added value to the generated brines as raw material for the production of Cl_2, H_2, and NaOH. Furthermore, chlorine could be used for chlorination of the public water supply.

4.2. HCl and NaOH production with bipolar membrane electrodialysis

Membrane electrodialysis operates by using enhanced ionic mobility under an applied potential and by limiting movements of ions using ion-selective membranes. Bipolar membrane electrodialysis (BMED) uses the above principle in conjunction with a bipolar membrane, which is used to split water into protons and hydroxide ions. The combination of protons and anions in certain chambers leads to production of acid, while the combination of hydroxide ions and cations in other chambers leads to production of the corresponding base. The diffusion of ions in a typical BMED system is shown in Fig. 21. Badruzzaman et al. [80] proposed BMED as a technology for the production of HCl and NaOH from saline solutions by means of several treatments, emphasizing a process consisting of a membrane bioreactor (MBR), RO, $Ca(OH)_2$ softening and BMED, called an integrated membrane system (IMS). In those experiments, feedwater had a salinity of 2950 mg/L, which is far from seawater or brine values.

Results showed that during the ED process all major anions (chloride, sulfate and nitrate) were accumulated in the acid chamber and all major cations (sodium, potassium) were accumulated in the base chamber. Therefore, after production of acid and base, the treated water can be directly used as product water or, if needed, can be treated again by RO. Authors compared the costs for implementing an IMS process with two processes, starting with MBR and RO followed by a conventional disposal option (evaporation ponds) in the first case and a thermal zero liquid discharge option (concentrator and crystallizer) in the second. The capital costs required for the options with evaporation

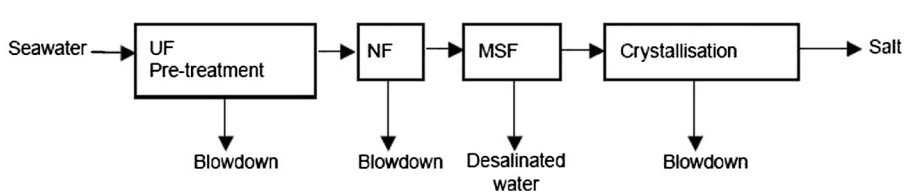

Fig. 18. Schematic of desalination in UF–NF–MSF-crystallization system [75].

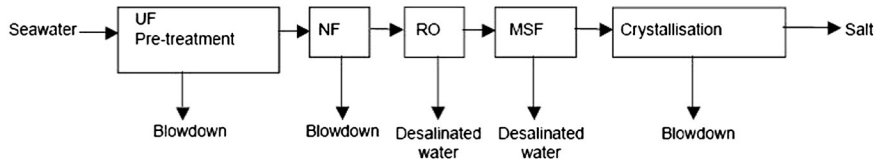

Fig. 19. Schematic of desalination in UF–NF–RO–MSF-crystallization system [75].

ponds and ZLD are \$1.63/m^3 and \$0.49/m^3, respectively, whereas the capital cost for IMS is only \$0.43/m^3. The annual O&M cost of the IMS process (\$0.26/m^3) is also the lowest in comparison to evaporation ponds (\$0.41/m^3) and ZLD (\$0.81/m^3). If the commercial value of the acid and base produced and the cost of recovered water are considered, then an additional \$0.1/m^3 can be recovered by using the IMS process. Compared to evaporation ponds or other options, HCl and NaOH production reduces the amount of land required and allows concentrating brine where land is expensive or even not available. This technology also produces chemicals with high demand which are easy to sell. However, BMED is not applied at an industrial scale because the electrolytic cells of the chlor-alkali industry are established as the industrial standard.

5. Metal recovery

Seawater usually contains sixty elements from the Periodic Table and some of them are scarce and expensive. Attention has long been oriented toward recovering valuable metals from the rejected brine, taking advantage of their relatively high levels in concentrated brines. Dirach et al. [2] designed a protocol to extract elements of interest from concentrate on the basis of several economic, physical–chemical and technical criteria. The proposed process starts with evaporation to reach a concentrated solution of up to about 200 g/L. Then the first extractive step is applied to phosphorus, making the phosphates precipitate using an alum blend of iron sulfate and aluminum sulfate. The next step consists in cesium recovery through liquid–liquid extraction by adding HCl. Indium recovery is performed by another liquid–liquid extraction with an organic phase, composed of three different acids. Effective separation is accomplished by a countercurrent process of 15 stages. Indium is then recovered with a purity of 97.4% and gallium with a purity of 99.8%. The next step consists in rubidium extraction using cation exchange resins. Potassium is the most attracted element, after rubidium. Further purification would be necessary to separate these two elements. Germanium recovery is then undertaken. It is crystallized in the form of germanium dioxide (GeO_2) and the solid is exposed to gaseous HCl and oxidation and then reduced to pure germanium by roasting in a reducing atmosphere of H_2. The remaining solution contains mainly magnesium, potassium and NaCl. Separation of those compounds is based on solubility differences between them.

Petersková et al. [81] studied the potential of a number of sorbents for extracting valuable metals (cesium, rubidium, lithium, uranium) from RO brine from a plant in El Prat de Llobregat, Spain. Results showed that the hexacyanoferrate-based extractant CsTreat was the best sorbent for both cesium and rubidium among the ones tested, but that any of them was successful at sorbing lithium. With regard to uranium(VI), the resin containing phosphonic and sulfonic groups displayed the highest affinity for this metal. Results also revealed that salinity appeared to hardly influence the cesium sorption onto CsTreat. The sorption results from bimetallic systems differed moderately from those with single-metal systems, indicating that the sorption capacity was not influenced much by any co-ion effect and, thus, that CsTreat was highly selectivity for cesium and rubidium.

Metal recovery provides new and plentiful sources of many valuable and scarce metals all around the world, which makes its potential profitability very high. For example, uranium recovery could supply a non-carbon source of energy to many countries where it is not available with conventional processes. From an environmental point of view, metal recovery could avoid the impact produced by mines. However, technologies for metal recovery are still immature and far from being competitive with traditional processes. This technology requires more research to improve performance in extraction steps and acquire an adequate level of development to be built at industrial scale.

6. Conclusions

Table 5 summarizes the most important characteristics of the technologies described in this article. The study reveals that zero discharge of desalination brine is a goal involving very high treatment costs, which means it can be applied only in very specific cases. Nonetheless, technologies are currently under development for reducing effluent volume, which will help achieve this goal. In general, the emerging technologies are promising for the reduction of effluent volume, although most have been developed on a laboratory scale and it is difficult to determine their applicability on an industrial scale. Furthermore, the research has been addressed mainly to the treatment of brackish inland waters at considerably lower volumes than commonly found in seawater desalination plants, so the results cannot be extrapolated directly to these plants. In-depth research is therefore needed in the field of seawater desalination plant waste.

Evaporation ponds are a method worth bearing in mind for small amounts of effluent in arid or semi-arid places because they are simple and operating costs are low. However, they are ineffective in damp climates because the evaporation rate is very low, or for processing large quantities because they require vast amounts of land. WAIV technology reduces land requirements compared to evaporation ponds, but its availability has been demonstrated only on a pre-commercial scale. Neither are the ponds feasible for large amounts of brine. Phytodesalination is simple and makes it possible to produce forage and reuse brine simply by irrigating the soil. However, it is still in the experimental stage and can lead to soil and aquifer salinity. Concentrators and crystallizers are a technology developed on an industrial scale but the energy expense

Table 2
Cost of desalination and salt production in UF–NF–MSF-crystallization system per 1 m^3 of UF permeate [75].

	Unit cost	Cost per 1 m^3 of UF permeate
UF	\$0.07/m^3	\$0.070/m^3
NF	\$0.18/m^3	\$0.126/m^3
MSF	\$1.00/m^3	\$0.613/m^3
Crystallization	\$8.00/t	\$0.137/m^3
Total		\$0.946/m^3

Table 3
Cost of desalination and salt production in UF–NF–RO–MSF-crystallization system per 1 m^3 of UF permeate [75].

	Unit cost	Cost per 1 m^3 of UF permeate
UF	\$0.07/m^3	\$0.070/m^3
NF	\$0.18/m^3	\$0.126/m^3
RO	\$0.63/m^3	\$0.287/m^3
MSF	\$1.00/m^3	\$0.158/m^3
Crystallization	\$8.00/t	\$0.137/m^3
Total		\$0.778/m^3

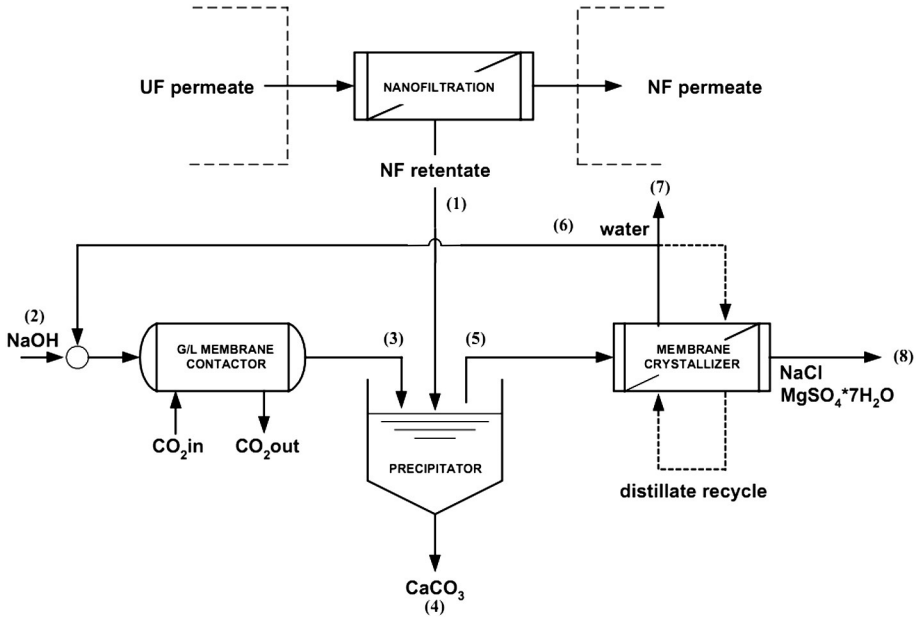

Fig. 20. Flow sheet of the integrated membrane system for the recovery of dissolved salts in seawater NF retentate [76].

is very high, making it not feasible at present. Membrane distillation is available on an industrial scale and the energy requirement of this technology is lower if compared with traditional evaporation methods. Moreover, membrane distillation could be easily coupled with solar ponds or other residual heat sources. The installation of a second stage of RO is a breakthrough that has brought about significant improvements in desalination plants thanks to be a well-known process. The main drawback with this treatment is the cost of the chemical reagents required. Closed circuit desalination uses RO, a well-known technology, and achieves high recovery with reduced capital costs. However, permeate flow is lower for the same membrane area, which makes this configuration optimal for applications where capital costs are crucial and flow is not critical. Some studies point out that a forward osmosis process in a serial configuration following a RO process can greatly increase water recovery with low energy requirements compared to other membrane technologies. Nevertheless, forward osmosis requires draw solutes and specifically designed membranes to improve its performance. Electrodialysis and electrodialysis reversal are developed at industrial scale and concentrate brine requiring only electricity as an energy source, which makes it suitable to combine with photovoltaic panels. However, electrodialysis performs worse than other technologies when the brine becomes highly concentrated due to scaling on the membranes and lower yield of electric fields.

Technologies oriented toward obtaining commercial salts show greater potential than those whose main purpose is only to eliminate effluents. It is undeniable that the income of commercializing salts is a key option to improve the cost-effectiveness ratio of desalination processes. For example, in the case of NaCl production, concentration in RO brine is twice that of seawater, which saves energy compared to conventional systems. However, these technologies are usually more complicated and involve higher capital costs. They combine different types of processes depending on the objective sought. The aim of the SAL-PROC process is particularly appropriate for brine with high levels of dissolved sulfate, potassium and magnesium salts. Theoretical studies highlight the economic feasibility of this technology thanks to gypsum, sodium chloride, magnesium hydroxide, calcium chloride, calcium carbonate and sodium sulfate production, however, there are currently no seawater desalination plants with this technology installed (it has been tested only with brackish water). The University of South Carolina's ZDD patent raises fresh water recovery and produces valuable salts, sodium chloride, magnesium hydroxide and bromine from RO brines fed with seawater. Theoretical studies carried out by the University of South Carolina showed the economic feasibility of the processes developed. It is therefore a technology well worth bearing in mind, although it is not currently in operation. ZDD based on electrodialysis–metathesis provides a significant advantage in treating RO concentrate because the membrane-fouling potentials of typical scalants such as $CaSO_4$ and $CaCO_3$ do not increase with water recovery, as is the case with other desalination processes. However, it is limited to brackish waters because energy requirements increase with salinity. Integrated processes have high water recovery; the yield is independent of climate conditions and some of the processes involved are developed at industrial scale. However, integrated processes are complex and costs are high compared with other options. Nevertheless, salt production could contribute to offsetting these costs.

One of the alternatives with potential for application is the treatment of brine for use in the industry. This option involves complex processes to produce brine ready to feed an industrial plant. Brine adaptation for the chlor-alkali industry requires processes to concentrate the brine such as electrodialysis. It is also necessary to eliminate the divalent cations in brine because they exceed the specifications for membrane electrolysis. These treatments involve high costs, which can be offset by the products obtained from electrolysis. It is advisable to install the electrolysis plant as an annex to the desalination plant. Bipolar membrane electrodialysis produces NaOH and HCl, chemicals with high demand which are easy to sell. However, bipolar membrane electrodialysis is not applied at an industrial scale because the electrolytic cells of the chlor-alkali industry are established as the industrial standard.

The recovery of metals from seawater or brine is another promising alternative, considering the metals that can potentially be obtained from seawater and their economic value. Research is needed in this field to develop selective extraction processes for the desired elements found in seawater and brine.

Table 4
Composition of end products of chlor-alkali electrolytic process [77].

Cl_2	NaOH	H_2
Cl_2 > 98% (vol.) H_2 < 2% (vol.)	NaOH 32% (weight) NaCl < 20 ppm	>99.9% (vol.)

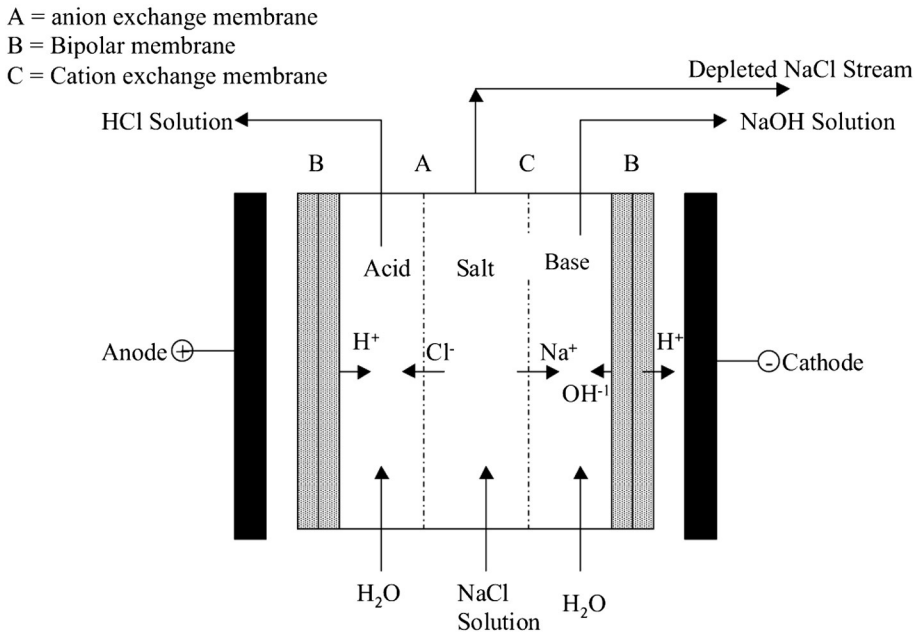

Fig. 21. Schematic of bipolar membrane electrodialysis (BMED) system operating principle [80].

Considering the pros and cons of all the technologies reviewed, membrane distillation, forward osmosis, electro-separation processes and metal recovery are the most promising for desalination plants' brine management. Membrane distillation and forward osmosis can achieve high water recovery, are simple and have reduced capital costs compared with technologies for commercial salt recovery. Land requirements are

Table 5
Comparison of methods.

Technology	Development status	Technical observations	Economic observations
Evaporation ponds	Industrial scale	Large extents of land. Simple operation Possible contamination of groundwater	Possibility of salts recovery. Low economic cost
WAIV technology	Pilot plant scale	Large extents of land Possible contamination of groundwater 50 to 90% higher evaporation rate than evaporation ponds	Possibility of salt recovery Low economic cost
Evaporation and crystallization systems	Industrial scale	Technology available More development needed to reduce energy use	High capital and operating costs
Membrane distillation	Pilot plant scale	Technically feasible for treating brine from desalination plants Possible problems with scaling caused by precipitation of salts on membranes	Promising technology for brine management Can be couplet to residual heat (available in industrialized countries) Higher energy consumption relative to energy use of reverse osmosis, but less than traditional evaporation and crystallization systems
Two-stage reverse osmosis	Industrial scale	Technology available Increase water recovery	The energy cost is affordable with energy recovery systems High reagent dosage that considerably increases process cost
Closed circuit desalination	Industrial scale	Technology available Increase water recovery	Higher capital costs due to smaller permeate flow for the same membrane area
Forward osmosis	Pilot plant scale. Extensive research experience	Simple technology. Recycles 76% of water when coupled with reverse osmosis systems Precipitation of salts on membranes diminishes flow. More development needed in membrane technology	Low energy requirements as compared to other technologies
Electrodialysis	Industrial scale	Problems with precipitation on the electrodialysis membrane More than 10% of salinity could be achieved in concentrated brine.	Electric energy use is 7–8 kWh/m^3 of concentrated brine from RO.
SAL-PROC process	Patented. Not tested at industrial scale	Simple technology based on chemical precipitation reactions	Recovers commercial salts Studies show it is economically feasible for brackish inland waters.
ZDD technology	Patented for sea and brackish water	All the processes included in the technology are currently available. Studies based on mathematical models and tests assert 76 to 100% water recovery.	Studies indicate it is economically feasible. Recovers commercial salts
Integrated processes	Pilot plant scale for seawater	Combine various available technologies Up to 95% water recovery	Salt production Asserts production of desalinated water with costs between 0.43 and \$0.71/m^3
Brine adaptation for chlor-alkali industry	Industrial scale	Simple, available technology Need to concentrate and eliminate divalent ions	Potential benefit for the chlor-alkali industry
Metals recovery	Bench scale	Requires use of selective extraction methods	Elements like Rb, Cs and U are a potentially important benefit.

also lower compared with solar evaporation or phytodesalination. Furthermore, membrane distillation and forward osmosis can successfully deal with ever-increasing energy costs because of the energy resources they require. Membrane distillation needs a source of heat which can be easily supplied by solar ponds and, where they are not available or when solar energy cannot cover demand, they can be coupled with industrial waste heat or even with a boiler. In forward osmosis the driving force is osmotic pressure, which reduces energy costs to those involved in recovering the draw solute. The applicability of ED for brine conditioning for other industries is an interesting approach for brine management. In fact, ED is applied commercially in Japan for concentrating seawater to TDS 200 g/L before harvesting sodium chloride using brine concentrators and crystallizers. Metal recovery provides new and plentiful sources of many valuable and scarce metals all around the world, which makes its potential profitability higher than any other technology. This is the case of, for example, uranium, lithium, cesium, rubidium, etc. From an environmental point of view, metal recovery could avoid the impact produced by mines or other extraction technologies.

References

[1] R.F. Service, Desalination freshens up, Science 313 (2006) 1088–1090.
[2] J. Le Dirach, S. Nisan, C. Poletiko, Extraction of strategic materials from the concentrated brine rejected by integrated nuclear desalination systems, Desalination 182 (2005) 449–460.
[3] L.F. Greenlee, D.F. Lawler, B.D. Freeman, B. Marrot, P. Moulin, Reverse osmosis desalination: water sources, technology, and today's challenges, Water Res. 43 (2009) 2317–2348.
[4] B. Sauvet-Goichon, Ashkelon desalination plant — a successful challenge, Desalination 203 (2007) 75–81.
[5] J. Del Bene, G. Jirka, J. Largier, Ocean brine disposal, Desalination 97 (1994) 365–372.
[6] D.A. Roberts, E.L. Johnston, N.A. Knott, Impacts of desalination plant discharges on the marine environment: a critical review of published studies, Water Res. 44 (2010) 5117–5128.
[7] J. Cebrian, C. Duarte, Detrital stocks and dynamics of the seagrass *Posidonia oceanica* (L.) Delile in the Spanish Mediterranean, Aquat. Bot. 70 (2001) 295–309.
[8] H. Directive, Council Directive 92/43/EEC of 21 May 1992 on the conservation of natural habitats and of wild fauna and flora, Official Journal of European Communities L 206 (22/07/1992) 7–50.
[9] A. Sureda, A. Box, J. Terrados, S. Deudero, A. Pons, Antioxidant response of the seagrass *Posidonia oceanica* when epiphytized by the invasive macroalgae *Lophocladia lallemandii*, Mar. Environ. Res. 66 (2008) 359–363.
[10] E. Gacia, O. Invers, M. Manzanera, E. Ballesteros, J. Romero, Impact of the brine from a desalination plant on a shallow seagrass (*Posidonia oceanica*) meadow, Estuar. Coast. Shelf Sci. 72 (2007) 579–590.
[11] M. Ahmed, A. Arakel, D. Hoey, M. Coleman, Integrated power, water and salt generation: a discussion paper, Desalination 134 (2001) 37–45.
[12] J.M. Arnal, M. Sancho, I. Iborra, J. Gozalvez, Concentration of brines from RO desalination plants by natural evaporation, Desalination 182 (2005) 435–439.
[13] C.J. Gabelich, A. Rahardianto, C.R. Northrup, T.I. Yun, Y. Cohen, Process evaluation of intermediate chemical demineralization for water recovery enhancement in production-scale brackish water desalting, Desalination 272 (2011) 36–45.
[14] M. Ahmed, W. Shayya, D. Hoey, J. Al-Handaly, Brine disposal from inland desalination plants: research needs assessment, Water Int. (2002) 37–41.
[15] L. Katzir, Y. Volkmann, N. Daltrophe, E. Korngold, R. Mesalem, Y. Oren, et al., WAIV—wind aided intensified evaporation for brine volume reduction and generating mineral byproducts, Desalin. Water Treat. 13 (2010) 63–73.
[16] M. Ahmed, W. Shayya, D. Hoey, Use of evaporation ponds for brine disposal in desalination plants, Desalination 130 (2000) 155–168.
[17] M. Ahmed, W.H. Shayya, D. Hoey, J. Al-Handaly, Brine disposal from inland desalination plants, Water Int. 27 (2002) 194–201.
[18] J. Gilron, Y. Folkman, R. Savliev, M. Waisman, O. Kedem, WAIV — wind aided intensified evaporation for reduction of desalination brine volume, Desalination 158 (2003) 205–214.
[19] J. Truesdall, M. Mickley, R. Hamilton, Survey of membrane drinking water plant disposal methods, Desalination 102 (1995) 93–105.
[20] Lesico Cleantech, http://www.lesico-cleantech.com/?cat=9.
[21] J. Glater, Y. Cohen, Brine disposal from land based membrane desalination plants: a critical assessment, 2003.
[22] L. Philip, K.S. Reddy, B. Kumar, S.M. Bhallamudi, A. Kannan, Performance evaluation of a solar and wind aided cross-flow evaporator for RO reject management, Desalination 317 (2013) 1–10.
[23] F.L. Jordan, M. Yoklic, K. Morino, P. Brown, R. Seaman, E.P. Glenn, Consumptive water use and stomatal conductance of *Atriplex lentiformis* irrigated with industrial brine in a desert irrigation district, Agric. For. Meteorol. 149 (2009) 899–912.
[24] E. Glenn, T. Thompson, S. Miyamoto, Halophyte crops and a sand-bed solar concentrator to reduce and recycle industrial, desalination and agricultural brines, 1998.
[25] C.E. De Moura, N. Da Silva, F. Favoro, D.O. Nogueira, D.E.S. Neto, M.F. Neto, Bell pepper cultivation with brine from brackish water desalination, Rev. Caatinga 24 (2011) 197–201.
[26] D. Zarzo Martinez, E. Campos Pozuelo, Project for the development of innovative solutions for brines from desalination plants, Desalin. Water Treat. 31 (2011) 206–217.
[27] M. Mickley, Survey of High-recovery and Zero Liquid Discharge Technologies for Water Utilities, WateReuse Foundation, 2008.
[28] M. Khayet, T. Matsuura, Membrane Distillation: Principles and Applications, 2011.
[29] J.-P. Mericq, S. Laborie, C. Cabassud, Vacuum membrane distillation of seawater reverse osmosis brines, Water Res. 44 (2010) 5260–5273.
[30] X. Ji, E. Curcio, S. Al Obaidani, G. Di Profio, E. Fontananova, E. Drioli, Membrane distillation–crystallization of seawater reverse osmosis brines, Sep. Purif. Technol. 71 (2010) 76–82.
[31] C.R. Martinetti, A.E. Childress, T.Y. Cath, High recovery of concentrated RO brines using forward osmosis and membrane distillation, J. Membr. Sci. 331 (2009) 31–39.
[32] T. Pankratz, Water desalination report, Desalination 49 (2013) 1–4.
[33] E. Guillén-Burrieza, J. Blanco, G. Zaragoza, D.-C. Alarcón, P. Palenzuela, M. Ibarra, et al., Experimental analysis of an air gap membrane distillation solar desalination pilot system, J. Membr. Sci. 379 (2011) 386–396.
[34] J. Walton, H. Lu, C. Turner, Solar and Waste Heat Desalination by Membrane Distillation, 2000.
[35] S. Kalogirou, Solar thermal power systems, Sol. Energy Eng. Second ed., 2014, pp. 521–552.
[36] H. Lu, J.C. Walton, A.H.P. Swift, Desalination coupled with salinity-gradient solar ponds, Desalination 136 (2001) 13–23.
[37] H.M. Qiblawey, F. Banat, Solar thermal desalination technologies, Desalination 220 (2008) 633–644.
[38] M. Kurihara, H. Yamamura, T. Nakanishi, S. Jinno, Operation and reliability of very high-recovery seawater desalination technologies by brine conversion two-stage RO desalination system, Desalination 138 (2001) 191–199.
[39] M. Kurihara, H. Yamamura, T. Nakanishi, High recovery/high pressure membranes for brine conversion SWRO process development and its performance data, Desalination 125 (1999) 9–15.
[40] M. Taniguchi, M. Kurihara, S. Kimura, Behavior of a reverse osmosis plant adopting a brine conversion two-stage process and its computer simulation, J. Membr. Sci. 183 (2001) 249–257.
[41] R.Y. Ning, A.J. Tarquin, Crystallization of salts from super-concentrate produced by tandem RO process, Desalin. Water Treat. 16 (2010) 238–242.
[42] R.Y. Ning, A.J. Tarquin, J.E. Balliew, Seawater RO treatment of RO concentrate to extreme silica concentrations, Desalin. Water Treat. 22 (2010) 286–291.
[43] A.M. Gilau, M.J. Small, Designing cost-effective seawater reverse osmosis system under optimal energy options, Renew. Energy 33 (2008) 617–630.
[44] L.F. Greenlee, F. Testa, D.F. Lawler, B.D. Freeman, P. Moulin, Effect of antiscalants on precipitation of an RO concentrate: metals precipitated and particle characteristics for several water compositions, Water Res. 44 (2010) 2672–2684.
[45] L.F. Greenlee, F. Testa, D.F. Lawler, B.D. Freeman, P. Moulin, Effect of antiscalant degradation on salt precipitation and solid/liquid separation of RO concentrate, J. Membr. Sci. 366 (2011) 48–61.
[46] A. Rahardianto, B.C. McCool, Y. Cohen, Accelerated desupersaturation of reverse osmosis concentrate by chemically-enhanced seeded precipitation, Desalination 264 (2010) 256–267.
[47] R. Bond, S. (Vasu) Veerapaneni, Zeroing in on ZLD technologies for inland desalination (PDF), J. Am. Water Works Assoc. 100 (2008) 76–89.
[48] F. Mohammadesmaeili, M.K. Badr, M. Abbaszadegan, P. Fox, Byproduct recovery from reclaimed water reverse osmosis concentrate using lime and soda-ash treatment, Water Environ. Res. 82 (2010) 342–350.
[49] D. Mukhopadhyay, Method and apparatus for high efficiency reverse osmosis operation, United States Patent No. 5.925.255, (1999).
[50] A. Rahardianto, J. Gao, C.J. Gabelich, M.D. Williams, Y. Cohen, High recovery membrane desalting of low-salinity brackish water: integration of accelerated precipitation softening with membrane RO, J. Membr. Sci. 289 (2007) 123–137.
[51] P. Sanciolo, E. Ostarcevic, P. Atherton, G. Leslie, T. Fane, Y. Cohen, et al., Enhancement of reverse osmosis water recovery using interstage calcium precipitation, Desalination 295 (2012) 43–52.
[52] R. Stover, Industrial and brackish water treatment with closed circuit reverse osmosis, Desalin. Water Treat. 51 (2013) 1124–1130.
[53] T. Qiu, P.A. Davies, Comparison of configurations for high-recovery inland desalination systems, Water 4 (2012) 690–706.
[54] A. Efraty, R.N. Barak, Z. Gal, Closed circuit desalination — a new low energy high recovery technology without energy recovery, Desalin. Water Treat. 31 (2011) 95–101.
[55] T. Cath, A. Childress, M. Elimelech, Forward osmosis: principles, applications, and recent developments, J. Membr. Sci. 281 (2006) 70–87.
[56] T.Y. Cath, S. Gormly, E.G. Beaudry, M.T. Flynn, V.D. Adams, A.E. Childress, Membrane contactor processes for wastewater reclamation in space Part I. Direct osmotic concentration as pretreatment for reverse osmosis, J. Membr. Sci. 257 (2005) 85–98.
[57] A. Neilly, V. Jegatheesan, L. Shu, Evaluating the potential for zero discharge from reverse osmosis desalination using integrated processes—a review, Desalin. Water Treat. 11 (2009) 58–65.
[58] W. Tang, H.Y. Ng, Concentration of brine by forward osmosis: performance and influence of membrane structure, Desalination 224 (2008) 143–153.
[59] T.Y. Cath, J.E.D. Rewes, C.D. Lundin, A Novel Hybrid Forward Osmosis Process for Drinking Water Augmentation Using Impaired Water and Saline Water Sources, 2009.
[60] R.L. McGinnis, M. Elimelech, Energy requirements of ammonia–carbon dioxide forward osmosis desalination, Desalination 207 (2007) 370–382.
[61] J.R. McCutcheon, R.L. McGinnis, M. Elimelech, A novel ammonia–carbon dioxide forward (direct) osmosis desalination process, Desalination 174 (2005) 1–11.

[62] J.R. McCutcheon, R.L. McGinnis, M. Elimelech, Desalination by ammonia–carbon dioxide forward osmosis: influence of draw and feed solution concentrations on process performance, J. Membr. Sci. 278 (2006) 114–123.
[63] E. Korngold, L. Aronov, N. Belayev, K. Kock, Electrodialysis with brine solutions oversaturated with calcium sulfate, Desalination 172 (2005) 63–75.
[64] E. Korngold, L. Aronov, N. Daltrophe, Electrodialysis of brine solutions discharged from an RO plant, Desalination 242 (2009) 215–227.
[65] Y. Oren, E. Korngold, N. Daltrophe, R. Messalem, Y. Volkman, L. Aronov, et al., Pilot studies on high recovery BWRO-EDR for near zero liquid discharge approach, Desalination 261 (2010) 321–330.
[66] G. Electric, Electrodialysis Reversal (EDR), http://www.lenntech.com/Data-sheets/GE-E-EDR-Broch.
[67] T. Pankratz, Water desalination report, Desalination 48 (2012) 1–4.
[68] J.E. Drewes, An Integrated Framework for Treatment and Management of Produced Water, 2009.
[69] M. Ahmed, A. Arakel, D. Hoey, Feasibility of salt production from inland RO desalination plant reject brine: a case study, Desalination 158 (2003) 109–117.
[70] A. Arakel, M. Mickley, L. Stapleton, Salinity Solutions: From "Waste Disposal" to "Resource Recovery,", Eng. Salin. Solut. 1st Natl. Salin. Eng. Conf. 2004, 2004, p. 43.
[71] T.A. Davis, S. Rayman, Zero discharge seawater desalination: integrating the production of freshwater, salt, magnesium, and bromine, USBR Desalin. Water Purif. Res. Dev. Progr. Rep., 2006.
[72] T.A. Davies, Water Desalination Process and Apparatus, PCT/US2005/032419, 2005.
[73] R. Bond, B. Batchelor, T. Davis, B. Klayman, Zero liquid discharge desalination of brackish water with an innovative form of electrodialysis: electrodialysis metathesis, Florida Water Resour. J. (2011) 38–42.
[74] M. Turek, Dual-purpose desalination–salt production electrodialysis, Desalination 153 (2003) 377–381.
[75] M. Turek, Seawater desalination and salt production in a hybrid membrane-thermal process, Desalination 153 (2003) 173–177.
[76] E. Drioli, E. Curcio, A. Criscuoli, G. Di Profio, Integrated system for recovery of $CaCO_3$, NaCl and $MgSO_4 \cdot 7H_2O$ from nanofiltration retentate, J. Membr. Sci. 239 (2004) 27–38.
[77] N. Melián-Martel, J.J. Sadhwani, S. Ovidio Pérez Báez, Saline waste disposal reuse for desalination plants for the chlor-alkali industry, Desalination 281 (2011) 35–41.
[78] Y. Tanaka, R. Ehara, S. Itoi, T. Goto, Ion-exchange membrane electrodialytic salt production using brine discharged from a reverse osmosis seawater desalination plant, J. Membr. Sci. 222 (2003) 71–86.
[79] Y. Kobuchi, Y. Terada, Y. Tani, The First Salt Plant in the Middle East Using Electrodialysis and Ion Exchange Membranes, ll, 1983, pp. 541–555.
[80] M. Badruzzaman, J. Oppenheimer, Innovative beneficial reuse of reverse osmosis concentrate using bipolar membrane electrodialysis and electrochlorination processes, J. Membr. Sci. 326 (2009) 392–399.
[81] M. Petersková, C. Valderrama, O. Gibert, J.L. Cortina, Extraction of valuable metal ions (Cs, Rb, Li, U) from reverse osmosis concentrate using selective sorbents, Desalination 286 (2012) 316–323.